U
408.3
.A1
FM 6-59
Reference

Reference

# FM 6-59

## DEPARTMENT OF THE ARMY FIELD MANUAL

Ch 1, 2,

Rescinded per-DACIR 310-80-3
15 OCT 1980

# FIELD ARTILLERY ROCKET HONEST JOHN WITH LAUNCHERS M386 AND M33

Pentagon Library (ANR-PL)
ATTN: Military Documents Section
Room 1A518, Pentagon
Washington, DC 20310-6050

HEADQUARTERS, DEPARTMENT OF THE ARMY
SEPTEMBER 1963

Reference



CHANGE No. 2

HEADQUARTERS
DEPARTMENT OF THE ARMY
WASHINGTON, D.C., *12 February 1973*

# FIELD ARTILLERY ROCKET, HONEST JOHN, WITH LAUNCHERS M386 AND M33

FM 6–59, 24 September 1963, 27 November 1968, is changed as follows:

*Page 42*, paragraph 70 is superseded as follows:

## 70. Misfires and Hangfires

*a.* A misfire is a failure of the propellant grain to ignite when the firing circuit is completed. A hangfire is a temporary failure to function; that is, there is a delay between completion of the firing circuit and ignition of the propellant. A misfire or hangfire may be caused by failure of the electric power source, faulty connections in the firing circuit, or a faulty igniter.

*b.* Since the difference between a misfire and a hangfire cannot be distinguished immediately, any failure of the rocket to fire will be regarded as a hangfire until a 30-minute safety interval has elapsed. During this time, the rocket must not be approached to determine the cause or to disarm the rocket.

*c.* If the rocket fails to fire on the initial attempt, make an immediate attempt to fire again. If the rocket does not fire at once, proceed as follows:

(1) If the power to the firing panel box M35 is provided by the vehicle battery, operate the vehicle motor and again attempt to fire. If the rocket still fails to fire, disconnect the firing line from the firing panel box and connect the firing line wires directly across the vehicle battery terminals. If the rocket still fails to fire, repeat the firing line continuity test, remove and short the wires, then wait 30 minutes before approaching the rocket.

(2) After waiting 30 minutes, completely disarm the rocket, then troubleshoot the electrical circuit to determine the cause of the misfire. In the case of the MGR–1A rocket, remove the igniter to the test pit and inspect it and perform a continuity test. If the igniter is faulty, replace the igniter.

(3) If the fault for either the MGR–1A or MGR–1B is determined and repaired, attempt to fire the rocket again. If the rocket still fails to fire, wait another 30 minutes and proceed to disarm the rocket in accordance with TM 9–1340–202–12.

(4) Subsequent to disarming and unmating the rocket, return the unserviceable components to the direct support unit.

*d.* In addition to the preceeding methods of firing the rocket, the use of RA 605/U thermal batteries with the M35 firing box is authorized. Regardless of the method used to fire the rocket, in the event of a misfire, the 30-minute safety interval must be observed prior to approaching the rocket.



THE ARMY LIBRARY
WASHINGTON, D. C.

By Order of the Secretary of the Army:

CREIGHTON W. ABRAMS
*General, United States Army*
*Chief of Staff*

Official:

VERNE L. BOWERS
*Major General, United States Army*
*The Adjutant General*

Distribution:

To be distributed in accordance with DA Form 12–11 requirements for Field Artillery Rocket Honest John with Launchers, M386 and M33.

Reference



CHANGE No. 1

HEADQUARTERS
DEPARTMENT OF THE ARMY
WASHINGTON, D.C., *27 November 1968*

# FIELD ARTILLERY ROCKET, HONEST JOHN, WITH LAUNCHERS M386 AND M33

FM 6-59, 24 September 1963, is changed as follows:

*Page 5*, paragraph 1*a*. Beginning in line 6, the last sentence is changed to read "The material presented herein is in consonance with International Standardization Agreement STANAG 2113, Destruction of Military Technical Equipments and is applicable to both nuclear and nonnuclear warfare."

*Page 5*, paragraph 2. In line 11, "AKPSIPL, Fort Sill, Okla." is changed to read "AKPSIAS-PL-FM, Fort Sill, Okla. 73503."

*Page 5*. Paragraph 4*a* is superseded as follows:

*a*. Detailed characteristics of the M386 launcher are given in TM 9-1055-205-10. The general characteristics are shown in (1) through (9) below.

(1) Length overall with MGR-1A rocket—35 feet 8 inches.

(2) Length overall with MGR-1B rocket—33 feet 8 inches.

(3) Height with MGR-1A rocket (fins mounted)—13 feet 8 inches.

(4) Height with MGR-1B rocket (fins mounted)—11 feet 7 inches.

(5) Height with MGR-1A or MGR-1B rocket (without fins)—11 feet 3 inches.

(6) Width—9 feet 6 inches.

(7) Length of beam assembly—27 feet 4 inches.

(8) Weight with MGR-1A rocket—40,163 pounds.

(9) Weight with MGR-1B rocket—38,969 pounds.

*Page 6*, paragraph 4*b*(1) through (8). "M31" and "M50" are changed to read "MGR-1A" and "MGR-1B" respectively.

*Page 8*. Paragraph 7*g* is superseded as follows:

*g. Radiotelephone Operator.* The radiotelephone operator drives the section commander's vehicle, records firing data, and performs other duties as directed by the section commander or the chief of section.

*Page 15*. Paragraph 17*a* "(M31" is changed to read "(MGR-1A".

*Page 15*. Paragraph 19*a*(1) is superseded as follows:

(1) Position vehicles according to the terrain of the loading point. There is no set procedure for positioning the launcher and wrecker. It is desirable, however, to select positions which minimize the distance the wrecker boom must be extended to accomplish the loading operation. The maximum boom safe load radius is the horizontal distance measured from the centerline of the pivot post to the centerline of the hoist hook. This maximum safe load radius for the M62 or M543 wrecker is 13 feet 6 inches when loading a complete MGR-1A rocket and 15 feet 6 inches when loading a complete MGR-1B rocket. An example of vehicle positions is shown in figure 5.

*Page 16.* Figure 5 is superseded as follows:

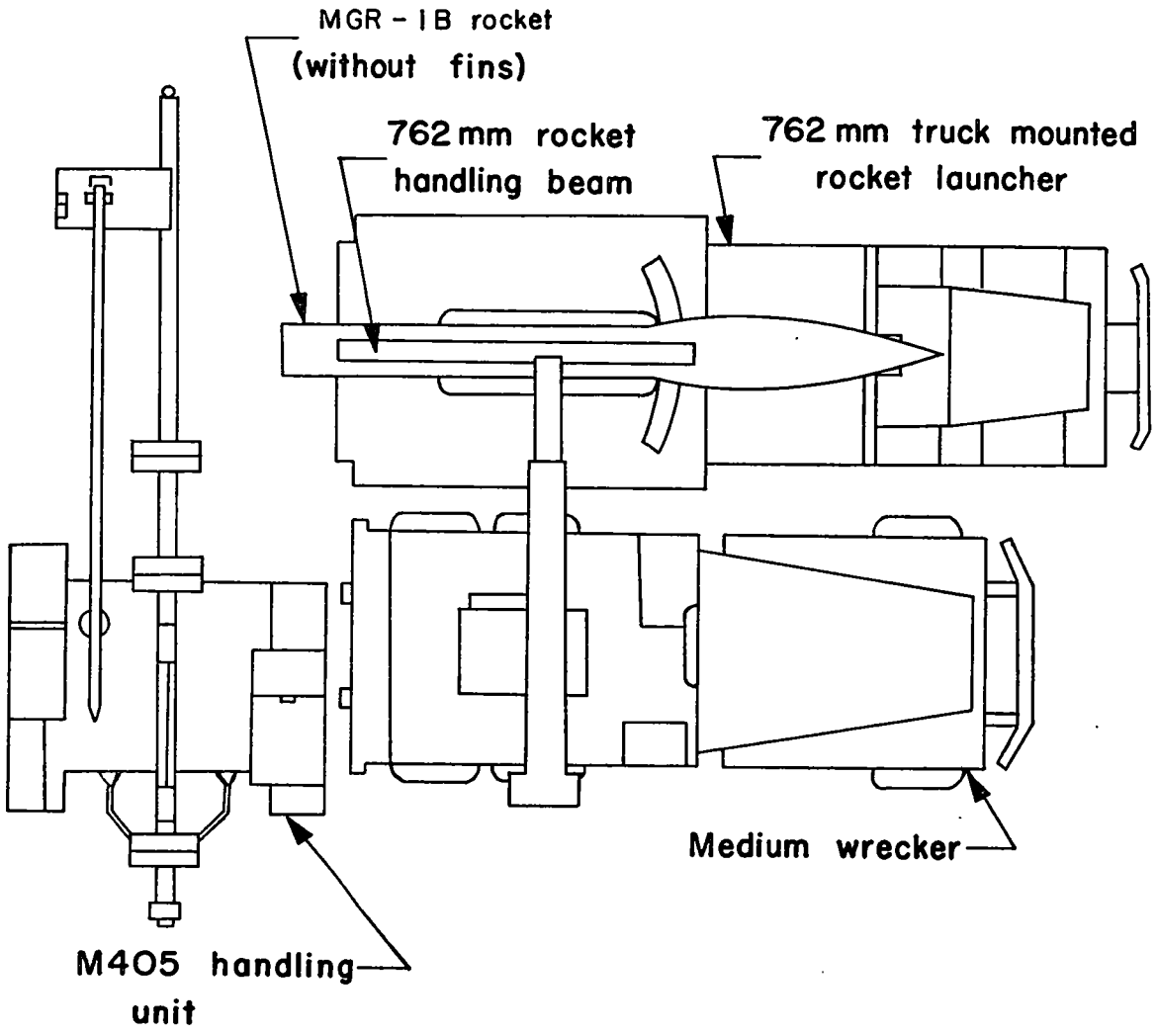


*Figure 5. Position of vehicles for loading.*

*Page 17*, paragraph 20*a*. Beginning in line 15, "The launcher is directed into position by the chief of section. Hand signals for guiding vehicles are given in FM 21-60." is deleted.

*Page 17*, paragraph 20*b*. In line 4, "operation" is changed to read "preparation".

*Page 19*, paragraph 24*d* is rescinded.

*Page 20*, paragraph 25*b*(7). At the end of line 5 add "the".

*Page 20*, paragraph 25*d* is superseded as follows:

*d. Sets a Deflection on an Aiming Point After the Launcher has been Laid.* The aiming circle normally will be used as an aiming point; however, the section commander may select an aiming point other than the aiming circle. For example, he may command AIMING POINT, LONE TREE, REFER. At this command, the gunner refers the sight to the lone tree and reports the deflection to the section commander.

*Page 21*, paragraph 26*a*(1). In line 6, "of the quadrant frame" is changed to read "on the frame of the gunner's quadrant".

*Page 21*, paragraph 26*a*(3). In line 4, "reat" is changed to read "rear", and in lines 17 and 18, "quadrange" is changed to read "quadrant".

*Page 24*, paragraph 33*d*. In line 2, "M31" is changed to read "MGR–1A".

*Page 24*. Paragraph 33*e* is superseded as follows:

*e*. Specific temperature limits are as follows:

| | *MGR–1A rocket* | *MGR–1B rocket* |
|---|---|---|
| Firing | 0° to 120° F. | −30° to 120° F. |
| Handling | 0° to 120° F. | −40° to 120° F. |
| Storage | −10° to 120° F. | −65° to 130° F. |

*NOTES.*

(1) Although the operational firing temperature limits for the MGR–1B rocket are from −30° F. to +120° F., a decrease in the performance reliability of the M66 and M66A1 rocket motors can be expected at temperatures above 100° F. At 120° F., the reliability is 91 percent with an assurance of 90 percent.

(2) The MGR–1A rocket (M3-series rocket motor) must not be moved when exposed to temperatures from 0° to −10° F. An MGR–1A rocket exposed to temperatures below −10° F. for more than 12 consecutive hours must be reported to the Commanding General, U.S. Army Missile Command, ATTN: AMSMI–SMEA, Redstone Arsenal, Ala. 35809.

(3) The MGR–1B rocket (M66-series rocket motor) must not be moved when exposed to temperatures from −40° to −65° F. or 120° to 130° F.; however, it can be stored at temperatures from 120° to 130° F. for up to 10 consecutive days. An MGR–1B rocket exposed to temperatures below −60° F. or above 130° F. must be reported to the U.S. Army Missile Command as in note 2 above.

*Page 24*, paragraph 33*f*. In line 1, "M31" is changed to read "MGR–1A."

*Page 24*, paragraph 34*d*. In line 4, "(par. 33*c*)" is changed to read "(para 33*e*)".

*Page 25*, paragraph 35 is superseded as follows:

## 35. Installation and Removal of the Heating Blanket

Installation and removal of the heating blankets are accomplished by the crewmen, supervised by the chief of section. Blanket sections A, B, C, D, E, F, G1, G2, G3, and H are used on an assembled MGR–1A rocket. Sections A, B, C, D, E, F, H, and K are used on an assembled MGR–1B rocket. Section J is used on the front of either rocket motor when the warhead is removed. Section K replaces sections G1, G2, and G3 for the MGR–1B rocket motor. This section must be removed if the fins are to be installed. The procedure for installation and removal of the heating blankets is contained in pertinent launcher technical manuals.

*Page 25*, paragraph 36*b*. In lines 1 and 2, "M31" and "M50" are changed to read "MGR–1A" and "MGR–1B" respectively.

*Page 27*. Paragraph 39*c* is superseded as follows:

*c*. *Plumbline*. It cannot be overemphasized that a plumbline is essential in the basic periodic test to obtain maximum accuracy. A weight may be used to keep the line taut, and the tendency of the weight to swing may be decreased by placing it in a container filled with a liquid. Units in garrison may find it convenient to rig a permanent plumbline on a building. Another method used with success is to position a second launcher head-on toward the launcher being tested. A plumbline is attached to the tip of the beam of the second launcher, and the beam is elevated to its maximum elevation.

*Page 27*, paragraph 41*d*. The following is added at the end of line 6, "and within 100 mils right or left of the center of traverse).".

*Page 28*. Paragraph 43*a* is superseded as follows:

*a*. Accurately cross-leveling the launcher, using a plumbline (aiming point). The launcher is cross-leveled by operating the cross-leveling handwheel. Cross-leveling is accomplished when the launcher beam tracks a plumbline, and the bottom carriage level assembly bubble remains centered. If the bubble deviates by more than one vial graduation while tracking the plumbline, the bottom carriage level assembly is out of tolerance and the launcher should be sent to an ordnance unit for adjustment or repair of the bottom carriage level assembly.

*Note*. The cross-leveling should be carefully checked, since the tests prescribed in paragraphs 44 through 51 are dependent on the trunnions being accurately leveled at all times. To insure accuracy, the cross-level should be checked by tracking the plumbline periodically throughout the test. One method of doing this is to check the track at 200-mil intervals throughout the elevation range to insure the launcher beam actually tracks the plumbline throughout its entire elevation capability.

*Page 28*, paragraph 44. In line 2, "testa" is changed to read "tests".

*Page 29*. Paragraph 49*c*(2) is superseded as follows:

(2) Cross-level the launcher as outlined in paragraph 43*a*.

*Page 29*, paragraph 50*c*. In line 2, "100-mils" is changed to read "0 mils".

*Page 30*, paragraph 50*d*. In line 8 "elevatino" is changed to read "elevation".

*Page 30*, paragraph 51*a*. In line 8, "1 mil" is changed to read "one-half mil".

*Page 32*, paragraph 53*f*(4). In line 1, "Cneter" is changed to read "Center".

*Page 35*, paragraph 55. In the last sentence "ordnance" is changed to read "maintenance".

*Page 35*, Paragraph 58*c* is superseded as follows:

*c.* Battery, battalion, and higher commanders should make frequent command inspections to insure that equipment is being maintained at prescribed standards of appearance, serviceability, and completeness.

*Page 35*, paragraph 58*d*. In line 3, "os" is changed to read "is".

*Page 35*, paragraph 59. In line 1, "First-echelon" is changed to read "Organizational".

*Page 39*, Chapter 9 is superseded as follows:

# CHAPTER 9

# DESTRUCTION OF EQUIPMENT

(STANAG 2113)

## 64. General

*a.* Tactical situations may arise in which it is necessary to abandon equipment in a combat zone. In such a situation, it is essential to destroy, to the maximum degree possible, all military technical equipment to prevent its eventual repair and use by the enemy.

*b. Equipment will be destroyed only on the authority delegated by a division or higher commander. Usually, such authority will be delegated to the senior military person present in the unit.*

## 65. Plans

An adequate, uniform, and easily executed plan will be prepared by each battery to expedite destruction of equipment. The following principles must be considered in developing the plan:

*a.* Priority must always be given to the destruction of classified materiel. Such destruction must, to the maximum extent possible, prevent duplication of the materiel by the enemy and must deny equipment operational or functional information to the enemy.

*b.* When complete destruction of abandoned equipment is not possible, priority must be given to destruction of all essential components (including spare parts) of a like kind, in order to render the equipment useless and prevent restoration by cannibalization.

*c.* Destruction must be as complete as possible.

*d.* The *same* essential parts must be destroyed throughout the battery.

*e.* Spare parts and accessories must be given the same priority as those installed on equipment.

## 66. Methods

*a.* The most generally applicable methods of destruction are—

(1) Mechanical—Requires ax, pick, sledge, or similar equipment.

(2) Burning—Requires gasoline, oil, or other flammables.

(3) Demolition—Requires ammunition or explosives.

(4) Gunfire—Requires artillery, rocket launcher, or rifle grenades.

*b.* In general, the destruction of essential parts, followed by burning, is sufficient to render the weapon useless.

*c.* Destruction of the 762-mm rocket involves the destruction of the highly sensitive propellant. For detailed methods of destruction, see TM 9-1340-202-12. If the nuclear warhead section is also to be destroyed, refer to TM 9-1100-200-12.

*d.* Denial of nuclear weapons to the enemy is of paramount importance. The most desirable form of denial is physical removal of the weapon from the threatened area. The next most desirable form of denial is gainful and expeditious employment of the weapon against the enemy. The least desirable form of denial is destruction of the weapon.

*Page 41*, paragraph 68*a*. In line 4, "M50" is changed to read "MGR-1B" and in line 7, "M31" is changed to read "MGR-1A".

*Page 41*, paragraph 68. Subparagraphs *b* and *c* are superseded as follows:

*b.* During rocket checkout, the assembly specialist will keep in his possession the safety plug that enables him to operate the firing panel. To avoid

accidental firing of the rocket, all personnel must remain clear of the firing panel box M35 until the chief of section indicates that the rocket is ready to be fired.

*c.* Extreme caution should be used in handling the igniter assembly of the MGR–1A rocket motor, which contains black powder easily ignited by heat, friction, impact, or a static charge.

*Page 41*, paragraph 69*b*. In line 1, "M31" is changed to read "MGR–1A".

*Page 41*, paragraph 69*c*. In line 1, "M50" is changed to read "MGR–1B".

*Page 42*. Paragraph 70 is superseded as follows:

## 70. Misfires and Hangfires

*a.* A misfire is a failure of the propellant grain to ignite when the firing circuit is completed. A hangfire is a temporary failure to function; that is, there is a delay between completion of the firing circuit and ignition of the propellant. A misfire or hangfire may be caused by failure of the electric power source, faulty connections in the firing circuit, or a faulty igniter.

*b.* Since the difference between a misfire and a hangfire cannot be distinguished immediately, any failure to fire will be regarded as a hangfire until a 30-minute safety interval has elapsed. After the safety interval has elapsed, the rocket should be disarmed in accordance with paragraph 2–44, TM 9–1340–202–12, for rocket MGR–1A and in accordance with paragraph 2–59 of the same TM for rocket MGR–1B. After the rocket is disarmed, all electrical circuits should be tested in accordance with paragraphs 2–18 and 2–29, TM 9–1340–202–12, for rocket MGR–1A and in accordance with paragraphs 2–22 and 2–51 of the same TM for rocket MGR–1B.

*Page 44*, paragraph 77. In Subject column, line 23, "prictice____" is changed to read "practice".

*Page 45*, paragraph 78*a*. In line 1, "determing" is changed to read "determining".

*Page 46*, paragraph 87*a*. In line 1, "shifting" is changed to read "repositioning".

*Page 46*, paragraph 87*d*. In line 2, "conclustion" is changed to read "conclusion".

*Page 46*, paragraph 87*f* is added as follows:

*f.* For the purpose of these tests, the initial aiming point will be the aiming circle with a deflection of 2,800 mils set on the scales of the panoramic telescope.

*Page 47*, paragraph 89*b*. In line 2, "transverse" is changed to read "traverse".

*Page 51*, paragraph 114*e*(3). In line 2, "slighting" is changed to read "sighting".

*Page 51*, section VIII. In the title of Section VIII, "MATERIAL" is changed to read "MATERIEL".

*Page 53*. Appendix I is superseded as follows:

# APPENDIX I

## REFERENCES

| | |
|---|---|
| AR 320–5 | Dictionary of United States Army Terms. |
| AR 385–62 | Firing Guided Missiles and Heavy Rockets for Training, Target Practice, and Combat. |
| AR 611–201 | Enlisted Military Occupational Specialities. |
| AR 750–5 | Organization, Policies, and Responsibilities for Maintenance Operation. |
| ATT 6–175 | Field Artillery Battalion (Battery), Honest John and Little John. |
| ATP 6–302 | Field Artillery Rocket Units, HONEST JOHN and LITTLE JOHN Rocket. |
| DA Pam 108–1 | Index of Army Films, Transparencies, GTA Charts and Recordings. |
| DA Pam 310-series | Index of Military Publications. |
| FM 1–100 | Army Aviation Utilization. |
| FM 5–15 | Field Fortifications. |
| FM 5–20 | Camouflage. |
| FM 5–25 | Explosives and Demolitions. |
| FM 6–20–2 | Field Artillery Techniques. |
| FM 6–40 | Field Artillery Cannon Gunnery. |
| FM 6–40–1 | Field Artillery Honest John/Little John Rocket Gunnery. |
| FM 6–61 | Field Artillery Battalion, HONEST JOHN. |

| | |
|---|---|
| FM 6-125 | Qualification Tests for Specialists, Field Artillery. |
| FM 6-140 | Field Artillery Cannon Battalions and Batteries. |
| FM 21-5 | Military Training Management. |
| FM 21-30 | Military Symbols. |
| FM 21-40 | Chemical, Biological, and Nuclear Defense. |
| FM 21-60 | Visual Signals. |
| FM 22-5 | Drill and Ceremonies. |
| FM 31-70 | Basic Cold Weather Manual. |
| LO 9-1055-204-12 | Launcher, 762-mm Rocket XM33. |
| LO 9-1055-205-10 | Launcher, Truck-Mounted, 762-mm Rocket M386. |
| TB 9-1000-212-20 | Launcher, 762-mm Rocket, Truck-Mounted, M289 and M386: Inspection Procedures and Straightness Standards for Launching Beam of Materiel in Hands of Troops. |
| TM 3-220 | Chemical, Biological, and Radiological (CBR) Decontamination. |
| TM 5-200 | Camouflage materials. |
| TM 9-238 | Deepwater Fording of Ordnance Materiel. |
| TM 9-247 | Materials used for Cleaning, Preserving, Abrading, and Cementing Ordnance Materiel; and Related Materiels, Including Chemicals. |
| TM 9-1055-203-15 | Operation and Maintenance: Truck-Mounted 762-mm Rocket Heating and Tiedown Unit M78A1. |
| TM 9-1055-205-10 | Operator's Manual: Truck-Mounted 762-mm Rocket Launcher M386. |
| TM 9-1055-205-20 | Organizational Maintenance Manual: Truck-Mounted 762-mm Rocket Launcher M386. |
| TM 9-1055-208-12 | Operator and Organizational Maintenance Manual: Trailer-Mounted 762-mm Rocket Handling Units M405 and M405A1. |
| (c) TM 9-1100-200-12 | Operator and Organizational Maintenance (prelaunch procedures): M27, M47, and M48 Atomic Warhead Sections: M72 training Atomic Warhead Section (U). |
| TM 9-1300-206 | Care, Handling, Preservation and Destruction of Ammunition. |
| TM 9-1340-202-12 | Operator and Organizational Maintenance Manual: 762-mm Rockets MGR-1A and MGR-1B (HONEST JOHN Rocket System). |
| TM 9-1375-200 | Demolition Materials. |
| TM 9-1527 | Ordnance Maintenance: Gunner's Quadrants M1 and M1918 and and Machinegun Clinometer M1917. |
| TM 9-1900 | Ammunition, General. |
| TM 9-2320-209-10 | *Operator's Manual for 2½ ton, 6x6, Chassis, Truck: |
| TM 9-2320-209-20 | *Organizational Maintenance Manual for 2½ ton, 6x6, Chassis, Truck: |
| TM 9-2320-211-10 | *Operator's Manual for 5-ton, 6x6 Truck, Chassis: |
| TM 9-2320-211-20 | *Organizational Maintenance Manual for 5-ton, 6x6, Truck, Chassis: |
| TM 9-6103 | Ordnance Maintenance: Telescope Mounts M3A1, M18A1, M21A1, M25, M30, M44, M44A1, M69 and M76. |
| TM 9-6147 | Ordnance Maintenance: Panoramic Telescopes: M12A7C, M12A7D, M12A7F, M12A7G, M12A7H and M12A7K (M12A7E4). |
| TM 9-8030 | *Operation and Organizational Maintenance: Truck, Ambulance, ¾ ton, 4x4. |
| TM 10-500 | Airdrop of Supplies and Equipment: General. |
| TM 11-6660-203-10 | Operator's Manual: Wind Measuring Sets AN/MMQ-1, AN/MMQ-1A, AN/MMQ-1B, and AN/PMQ-6. |

See footnote at end of appendix.

| | |
|---|---|
| TM 11–6660–203–20P | Organizational Maintenance Repair Parts and Special Tool Lists: Wind Measuring Sets AN/MMQ–1, AN/MMQ–1A, AN/MMQ–1B, AN/PMQ–6, and AN/PMQ–6A. |
| TM 11–6660–255–12 | Organizational Maintenance Manual Including Repair Parts and Special Tools List—Wind Measuring Sets AN/PMQ–6 and AN/PMQ–6A. |
| TM 21–300 | Driver Selection and Training (Wheeled Vehicles). |
| TM 21–301 | Driver Selection, Training and Supervision, Tracked Vehicles. |
| TM 21–305 | Manual for the Wheeled Vehicle Driver. |
| TM 38–750 | Army Equipment Record Procedures. ($CS_3$ Test.) |
| TOE 6–175 | Field Artillery Battalion, HONEST JOHN, Armored Division, or Field Artillery Battalion, HONEST JOHN, Infantry Division, or Field Artillery Battalion, HONEST JOHN, Infantry Division (Mechanized). |
| TOE 6–525 | Field Artillery Battalion, HONEST JOHN. |

**Note.* Refer to DA Pam 310–4 for complete listing of trucks covered by this manual.

*Page 55*, paragraph 1. In line 3, "(a&T)" is changed to read "(A&T)".

*Page 55*, paragraph 4*a*. In line 4, "assembly" is changed to read "assemble".

*Page 55*, paragraph 5*b*(5). In line 2, "portection" is changed to read "protection".

*Page 57*, paragraph 9. In line 5, "used" is changed to read "uses".

*Page 59*, paragraph 1. In line 1, "threater" is changed to read "theater".

*Page 59*, paragraph 4*a*. In line 3, "thr" is changed to read "the", and in line 4, "morot" is changed to read "motor".

*Page 61*, paragraph 15. The first three sentences are changed to read:

## 15. Boresighting

The distant aiming point method is normally used in boresighting the launcher in daylight when weather permits. The procedure for boresighting at night or during inclement weather is the same as that given in paragraph 42 of the manual except that the front boresight bracket rather than the rear boresight bracket is used to check the standard angle. This is because the night lighting device is used with the front boresight bracket on the M33 launcher. The procedure for boresighting by the distant aiming point method is as follows:

*Page 63*, paragraph 16*b*(3). In line 3, "100" is changed to read "0".

*Page 64*, paragraph 16*c*(1). In line 10, "one mil" is changed to read "one-half mil".

*Page 71*, table II. The following changes are made in the columns indicated:

Sequence 2 under No. 3 is changed to read "Assisted by No. 4, removes beam frame from handling unit and installs beam frame on launcher beam, or extends beam frame and installs beam frame on beam frame base assembly when loading the M33 launcher.".

Sequence 2 under No. 4 is changed to read "Assists No. 3 in removing and installing beam frame.".

Sequence 11 under No. 3 is changed to read "Assisted by No. 4, removes beam frame from launcher and stows beam frame on handling unit.".

Sequence 11 under No. 4 is changed to read "Assists No. 3 in removing and stowing beam frame.".

*Page 73*, (1) table III. The following changes are made in the columns indicated:

In sequence 3 under Chief of Section, insert "Checks folding beam firing position lock.".

Sequence 3 under Gunner is deleted.

Sequence 3 under No. 2 (driver) is changed to read "Unlocks left forward section of launching beam and swings it into the firing position. Locks the folding beam firing position lock in the firing position:".

In Sequence 5 under No. 1, "M31" is changed to read "MGR–1A".

*Page 75*,(2) table III. The following changes are made in the columns indicated:

Sequence 3 under No. 2 (driver) is changed to read "Unlocks left forward section of launching beam and swings it into the firing position. Locks the folding beam firing position lock in the firing position.".

Sequence 4 under Gunner is deleted.

Sequence 4 under No. 2 (driver) is changed to read "Emplaces front and rear boresight assemblies.".

Sequence 6 under No. 1 "(M31" is changed to read "(MGR–1A" and under No. 2 (driver), "is" is changed to read "as".

*Page 77*, table IV. The following changes are made in the title columns:

"AN/PMO–6" is changed to read "AN/PMQ–6".

"AN/MPQ–1A" is changed to read "AN/MMQ–1A".

"AN/MPQ–1B" is changed to read "AN/MMQ–1B".

*Page 79*, table V. The following changes are made in the columns indicated:

In sequence 2 under No. 1 the following is added, "Removes electric blankets from right side, assisted by assembly specialist 1.".

In sequence 2 under No. 2, "No. 6" is changed to read "assembly specialist 2".

Sequence 2 under No. 4 is deleted.

Sequence 2 under No. 5 is deleted.

Sequence 2 under No. 6 is deleted.

In sequence 2 under Assembly Specialist 1 the following is added, "Assists number 1 in removing electric blankets from right side."

In sequence 2 under Assembly Specialist 2 the following is added, "Assists number 2 in removing electric blankets from left side.".

In Sequence 4 under Chief of section "(M50)" is changed to read "(MGR–1B)" and "(M31)" is changed to read "(MGR–1A)".

*Page 101*, table XVII. In Sequence 6 under column No. 1, "(M31)" is changed to read "(MGR–1A)".

By Order of the Secretary of the Army:

W. C. WESTMORELAND,
*General, United States Army,*
*Chief of Staff.*

Official:
KENNETH G. WICKHAM,
*Major General, United States Army,*
*The Adjutant General.*

Distribution:
To be distributed in accordance with DA Form 12–11 requirements for FA Rocket, Honest John, with Launchers M386 and M33.





U.S. GOVERNMENT PRINTING OFFICE 1968

FIELD MANUAL

NO. 6-59

HEADQUARTERS,
DEPARTMENT OF THE ARMY
WASHINGTON, D. C., 24 September 1963

# FIELD ARTILLERY ROCKET, HONEST JOHN, WITH LAUNCHERS M386 AND M33


| | | | Paragraphs | Page |
|---|---|---|---|---|
| CHAPTER | 1. | GENERAL | 1-5 | 5 |
| | 2. | ORGANIZATION | 6,7 | 7 |
| | 3. | SECTION DRILL | | |
| Section | I. | General | 8,9 | 9 |
| | II. | Preliminary commands and formations | 10-16 | 9 |
| CHAPTER | 4. | PROCEDURES AND DUTIES FOR LOADING, PREPARATION FOR ACTION, FIRING, AND MARCH ORDER | | |
| Section | I. | Loading the launcher | 17-19 | 15 |
| | II. | Preparation for action | 20,21 | 17 |
| | III. | Duties in firing and march order | 22,23 | 19 |
| | IV. | Detailed description of certain duties | 24-26 | 19 |
| CHAPTER | 5. | TECHNIQUES AND SITUATIONS THAT REQUIRE SPECIAL ATTENTION | 27-37 | 23 |
| | 6. | BORESIGHTING AND BASIC PERIODIC TESTS | | |
| Section | I. | General | 38,39 | 27 |
| | II. | Boresighting | 40-42 | 27 |
| | III. | Basic periodic tests | 43-53 | 28 |
| CHAPTER | 7. | MAINTENANCE AND INSPECTIONS | 54-59 | 35 |
| | 8. | DECONTAMINATION OF EQUIPMENT | 60-63 | 37 |
| | 9. | DESTRUCTION OF EQUIPMENT | 64-66 | 39 |
| | 10. | SAFETY | 67-71 | 41 |
| | 11. | TRAINING | | |
| Section | I. | General | 72-74 | 43 |
| | II. | Minimum training schedule | 75-77 | 43 |
| CHAPTER | 12. | TESTS FOR QUALIFICATION OF GUNNERS | | |
| Section | I. | General | 78-85 | 45 |
| | II. | Indirect laying, deflection only | 86-90 | 46 |


*This manual supersedes FM 6-59, 2 March 1960, including C 1, 3 October 1961; and FM 6-58, 5 August '59.

| | | Paragraphs | Page |
|---|---|---|---|
| Section III. | Laying for quadrant elevation with gunner's quadrant | 91-95 | 47 |
| IV. | Measuring site to mask | 96-100 | 48 |
| V. | Measuring quadrant | 101-105 | 49 |
| VI. | Measuring deflection | 106-110 | 49 |
| VII. | Tests and adjustment of sighting and fire control equipment | 111-115 | 50 |
| VIII. | Materiel | 116-120 | 51 |
| APPENDIX I. | REFERENCES | | 53 |
| II. | ROCKET ASSEMBLY AND TRANSPORT SECTION | | 55 |
| III. | PROCEDURES AND DUTIES OF PERSONNEL, M33 LAUNCHER | | 59 |
| INDEX | | | 117 |

# CHAPTER 1

# GENERAL

## 1. Purpose and Scope

a. This manual is a guide to assist commanders in developing the firing and the assembly and transport (A&T) sections of HONEST JOHN rocket units into efficient teams capable of operating effectively under combat conditions. The material presented herein is applicable to both nuclear and nonnuclear warfare.

b. This manual prescribes—

(1) General and individual duties of firing section personnel.
(2) Section drills.
(3) Tests and adjustments of sighting and fire control equipment.
(4) Safety precautions.
(5) Individual duties of assembly and transport section personnel.
(6) Individual duties of personnel in rocket assembling and testing.
(7) Procedures for decontamination and destruction of equipment.

c. Procedures for operating the M33 launcher are contained in appendix III.

d. TM 9-1100-200-12 prescribes the procedures for the preparation and checkout of the nuclear warhead.

## 2. Changes or Comments

Users of this manual are encouraged to submit recommended changes or comments to improve the manual. Comments should be keyed to the specific page, paragraph, and line of the text in which the change is recommended. Reasons should be provided for each comment to insure understanding and complete evaluation. Comments should be forwarded direct to Commandant, U.S. Army Artillery and Missile School, ATTN: AKPSIPL, Fort Sill, Okla.

## 3. Definitions and Terms

a. Launcher. When used in connection with heavy free-flight rockets, the term "launcher" normally implies just the rail and associated sighting and aiming, elevating, and traversing mechanisms necessary to fire the rocket. In this manual, the term also includes the vehicle or the carriage upon which the launcher is mounted.

b. Section. Tables of organization and equipment prescribed the personnel and equipment comprising each section of a battery. In this manual, the term "section" applies to those personnel required to serve the rocket, launcher, and equipment of one section only.

## 4. Characteristics of Equipment

a. Detailed characteristics of the M386 launcher are given in TM 9-1055-205-10.

The general characteristics are shown in (1) through (8) below.

(1) Length overall with M31 rocket—35 feet 8 inches.
(2) Length overall with M50 rocket—33 feet 8 inches.
(3) Height with M31 rocket (fins mounted)—13 feet 8 inches.
(4) Height with M31 or M50 rocket (without fins)—11 feet 3 inches.
(5) Width—9 feet 6 inches.
(6) Length of beam assembly—27 feet 4 inches.
(7) Weight with M31 rocket—,163 pounds.
(8) Weight with M50 rocket—38,969 pounds.

b. Detailed characteristics of the M33 launcher are given in TM 9-1055-204-12. The general characteristics are shown in (1) through (8) below.

(1) Length overall with M31 rocket—32 feet.
(2) Length overall with M50 rocket—30 feet.
(3) Height with M31 rocket (fins mounted)—10 feet.
(4) Height with M50 rocket (fins mounted)—7 feet 7 inches.
(5) Height with M31 or 50 rocket (without fins)—7 feet 7 inches.
(6) Width—6 feet 11 inches.
(7) Weight with M31 rocket—10,288 pounds.
(8) Weight with M50 rocket (without fins)—9,174 pounds.

5. References

Related publications are listed in appendix I.

# CHAPTER 2
# ORGANIZATION

6. Composition of the Firing Section

The firing section consists of a 762-mm rocket launcher, a low-level wind measuring set (windset), ancillary equipment, and the following personnel:

a. Section commander
b. Chief of section (CS).
c. Gunner (G).
d. Senior Assembly Specialist (SAS).
e. Two assembly specialists (AS).
f. Six launcher crewman, numbered 1 through 6.
   (1) Number 2 is the launcher driver.
   (2) Number 6 is the section truck driver.
g. Radio telephone operator (light truck driver).

7. General Duties of Personnel

a. Section Commander. The section commander is responsible for the operation of the firing section. He performs the following duties:

(1) Supervises the preparation and execution of fire missions.
(2) Supervises the maintenance and operation of section equipment.
(3) Supervises the training, and directs the tactical employment of the section.

b. Chief of Section. The chief of section is the noncommissioned officer in command of the section. He is responsible to the section commander for—

(1) The training and efficiency of section personnel.
(2) The execution of fire commands by his section.
(3) The performance of duties listed under section drill in chapter 3.
(4) The determination and application of low-level wind corrections.
(5) Compliance with safety regulations.
(6) The preparation of field fortifications for protection of equipment, rockets, and personnel.
(7) Local perimeter security.
(8) Camouflage and radiological, biological, and chemical security discipline.
(9) The maintenance of section equipment records.

c. Gunner. The gunner assists the chief of section in carrying out the duties specified in b above. He lays the launcher for deflection and performs the duties listed in tables I through VI.*

d. Senior Assembly Specialist. The senior assembly specialist is responsible for—

(1) Assisting the chief of section and the gunner in carrying out the duties specified in b, and c above.
(2) Supervising the handling, checkout, testing, and preparation of the rocket.
(3) Performs additional duties as outlined in tables I through VI.

e. Assembly Specialists. The assembly specialists are responsible for—

(1) Handling, checkout, testing, and preparation of the rocket motor for firing.
(2) Preparation, checkout, and testing of the nuclear warhead.
(3) Preparation and fuzing of all warheads.

*Numbered tables, with the exception of tables VIII and IX, are fold-ins in back of manual.

(4) Performs additional duties as prescribed in tables I through VI.

f. Launcher Crewmen.

(1) The launcher crewmen perform the duties listed in tables I through VII and any additional duties assigned by the chief of section.

(2) Crewman number 2 drives and performs maintenance on the launcher. He also performs additional duties as prescribed in appropriate chapters of this manual.

(3) Crewman number 6 drives and performs maintenance on the section truck. He also performs additional duties as prescribed in appropriate chapters of this manual.

(4) Crewmen numbers 3, 4, 5, and 6 operate and perform maintenance on the AN/PMQ-6 low-level wind equipment.

(5) Crewmen numbers 5 and 6 operate and perform maintenance on the AN/MMQ-1-series low-level wind equipment.

g. Radiotelephone Operator. The radiotelephone operator drives the section commander's vehicle, and performs other duties as directed by the section commander or the chief of section.

# CHAPTER 3
# SECTION DRILL

## Section I. GENERAL

8. Objective

The drills prescribed in this manual will assist unit commanders in developing efficient, precise and rapid operations within the firing sections.

9. Instructions

a. Section drill is conducted in silence, except for commands and reports. The section is drilled until reactions to commands are automatic, immediate, and efficient.

b. Battery officers supervise the drill to insure that instructions are carried out and that maximum efficiency is obtained.

c. Mistakes are corrected immediately. Each member of the section must report promptly to the chief of section any mistakes discovered either before or after the command to fire has been given. The chief of section reports mistakes immediately to the section commander.

d. Duties should be rotated during training so that each member of the section is able to perform all duties within the section. In addition, battery overhead personnel not assigned specific duties during drill periods should be trained in the fundamentals of section drill so that they will be capable of functioning effectively with a firing section when required.

## Section II. PRELIMINARY COMMANDS AND FORMATIONS

10. Forming the Section

To form the section, the chief of section takes his post and gives one of the following commands:

a. To form the section, the command is FALL IN. The section—

(1) Moves at double time.

(2) Forms in single rank at close interval, with the gunner on the right and the senior assembly specialist, the launcher crewmen in numerical order, the assembly specialists, and the radio-telephone operator to the left of the gunner.

(3) Centers on the chief of section at a distance of 3 paces (fig 1).

b. To form the section in a particular place, the commands may be 1. IN FRONT (REAR) OF YOUR LAUNCHER, 2. FALL IN. The section—

(1) Moves and forms a single rank as in a above.

(2) Guides on the gunner.

c. To form the section in a particular direction, the commands may be 1. ON THE ROAD FACING THE PARK, 2. FALL IN.

The section—

(1) Moves and forms a single rank as in a above.

(2) Faces the direction indicated in the command.

Note. At the first formation for a drill or an exercise, the caution "As a section" precedes the command.

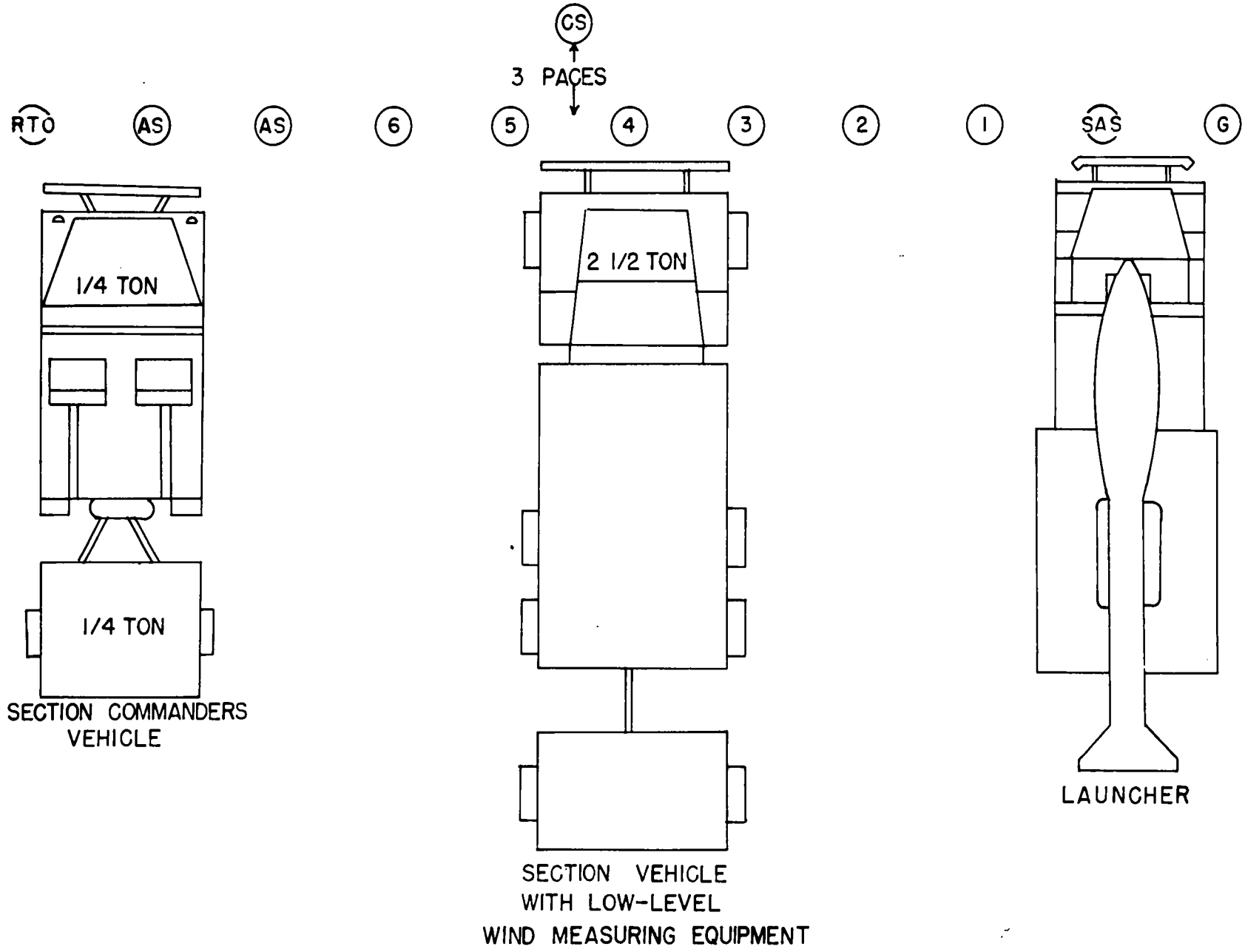


Figure 1. Firing section in formation.

11. To Call Off

With the section in formation, the command is CALL OFF.

a. All personnel except the gunner execute eyes right.

b. The section calls off in sequence: "Gunner, senior assembly specialist, 1, 2, 3,4,5,6, assembly specialist 1, assembly specialist 2, radio-telephone operator."

c. As each man calls out his designation, he turns his head smartly to the front.

12. To Take Posts

The command is 1. CREWMEN, 2. POSTS.

a. The command is general and may be given in or out of ranks, at a halt, or marching.

b. All movements are executed at double time and are terminated at the position of attention.

c. The section moves to posts as shown in—

(1) Figure 2, dismounted.
(2) Figure 3, mounted.
(3) Figure 4, prepared for action.

13. To Change Posts

The post of section personnel should be changed frequently to train all members of the section in all duties. The command is—

1. SECTION CHANGE POST, 2. MARCH.

a. The leftmost man moves at double time to the post of the gunner.

b. All other men take two left steps, occupying the position of the man on his left.

14. To Mount

To mount, the following commands may be given:

a. 1. PREPARE TO MOUNT, 2. MOUNT.

(1) At the preparatory command, the section moves at double time to the positions shown in figure 2.
(2) At the command of execution, personnel mount and take positions as shown in figure 3.
(3) Vehicle commanders and drivers verify that all equipment is secure, and that safety straps are secure prior to mounting.
(4) If any member of the section is not to mount, he is designated and cautioned to stand fast; for example, 1. PREPARE TO MOUNT, DRIVER STAND FAST, 2. MOUNT.

b. MOUNT. The section moves directly to the positions shown in figure 3.

15. To Dismount

To dismount, the following commands may be given:

a. 1. PREPARE TO DISMOUNT, 2. DISMOUNT.

(1) At the preparatory command, personnel assume positions from which they can dismount rapidly.
(2) At the command of execution, personnel dismount and take positions as shown in figure 2.

b. Dismount. The section moves without delay to positions as shown in figure 2.

16. To Fall Out

The command FALL OUT is given to provide rest and relief during drill or firing.

a. During Drill.

(1) The command may be given at any time.
(2) The section remains in the vicinity of the drill area.

b. When Firing.

(1) The command may be given when firing is temporarily suspended.
(2) The section remains in the vicinity of, but clear of, the launcher.
(3) The settings and layings on the launcher are not disturbed.

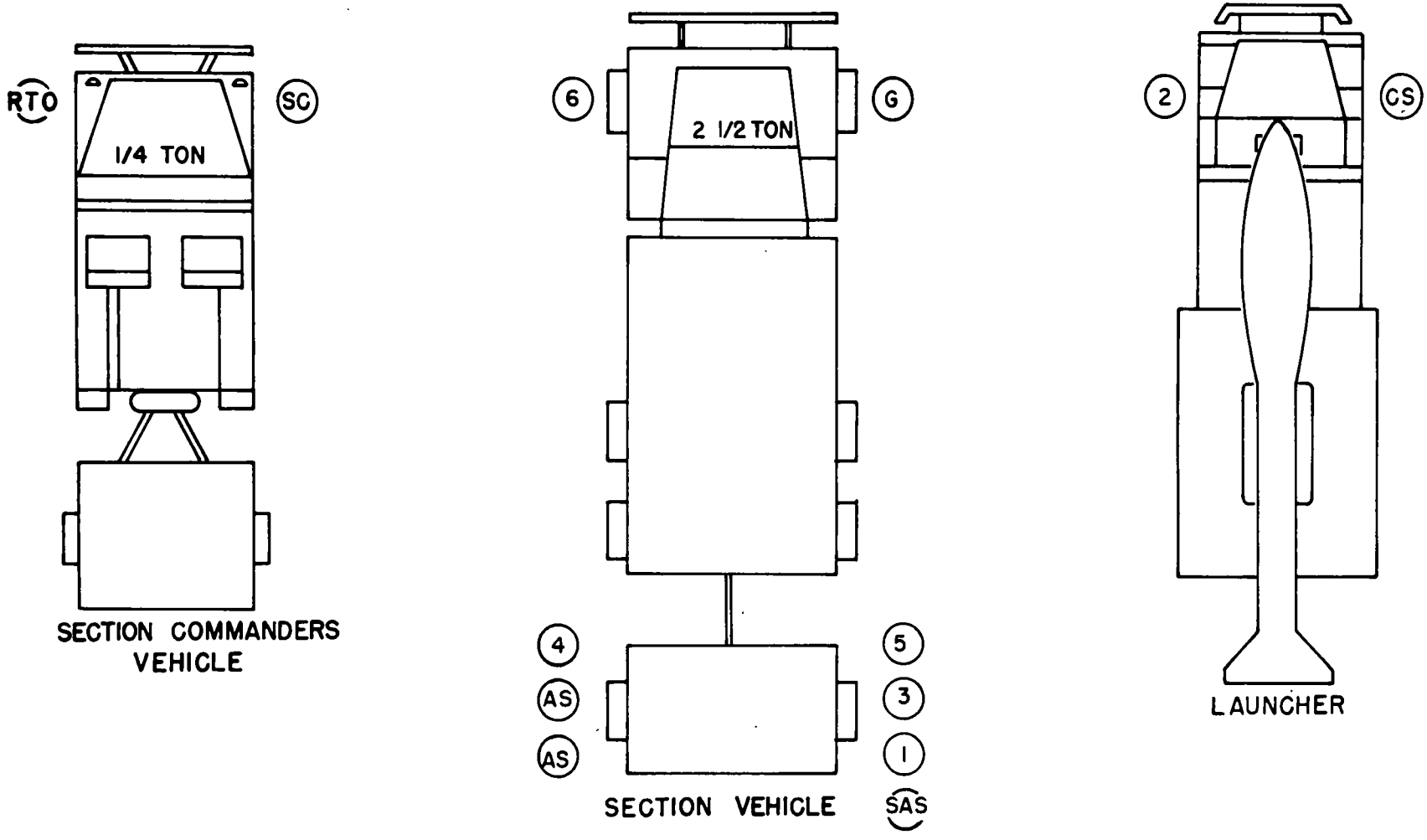


Figure 2. Posts, dismounted.

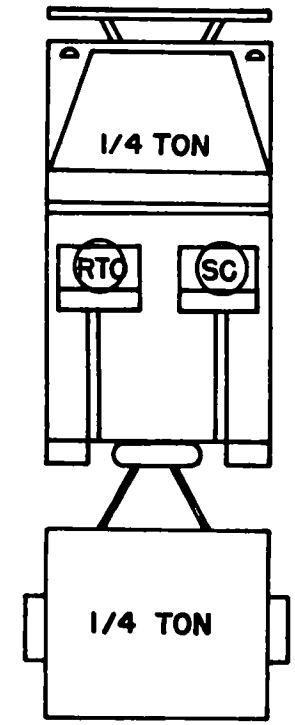


SECTION COMMANDERS VEHICLE

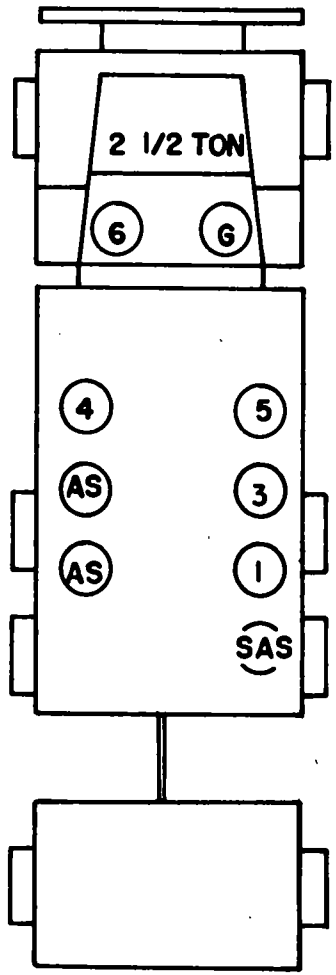


SECTION VEHICLE

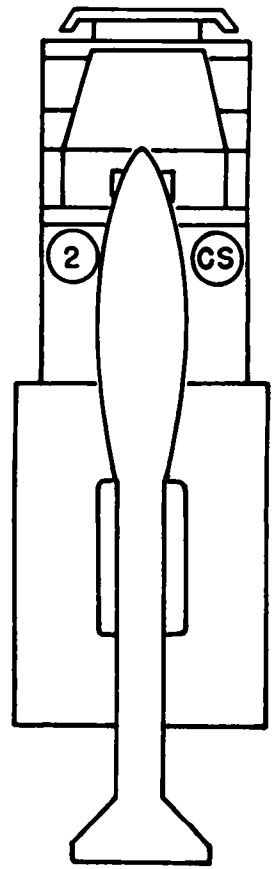


LAUNCHER

Figure 3. Posts, mounted.

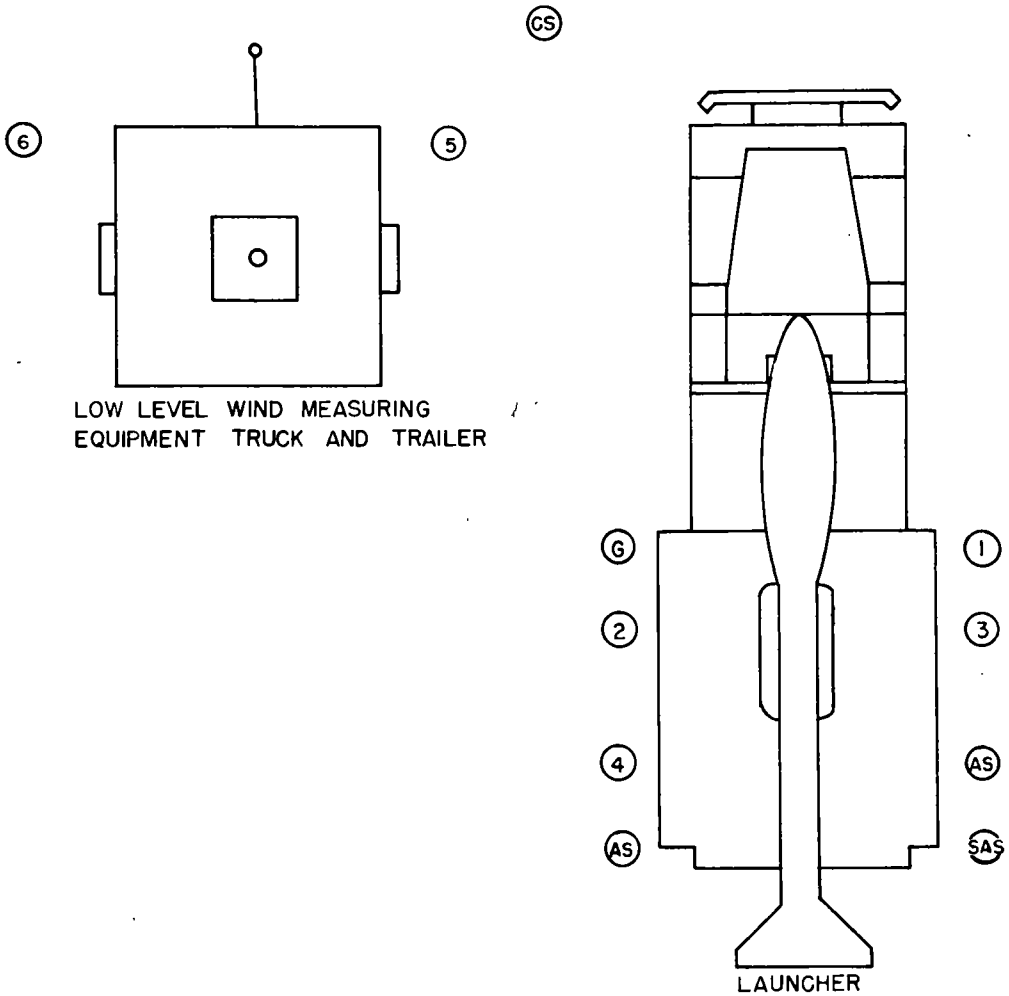


Figure 4. Posts, prepared for action.

# CHAPTER 4

# PROCEDURES AND DUTIES FOR LOADING, PREPARATION FOR ACTION, AND MARCH ORDER

## Section I. LOADING THE LAUNCHER

### 17. Loading Operations

Loading operations may be performed at the firing position; normally, however, loading operations are accomplished at points located some distance from the firing position. These operations consists of—

a. Installing the fins (M31 only).

b. Transferring the rocket from the rocket handling unit to the launcher.

c. Connecting the heating blankets to the electrical receptacles on the launcher if the ambient temperature requires that the rocket motor be heated.

### 18. Responsibilities for Loading

Loading operations are the responsibility of the firing section. However, personnel and equipment are required from the assembly and transport section to assist the firing section in transferring the rocket from the M405 handling unit to the launcher. The chief of section normally directs the loading operation. The firing section commander is responsible for selecting the loading point(s) for the section and for reporting the location(s) to the battery commander. Loading operations may be performed prior to moving the launcher to the firing position or as a part of preparation for action in those instances when loading is impractical prior to occupation of position. Prior to loading, a check must be made to insure that both the top and bottom rear shoe adapters have been installed on the M3-series rocket motor assembly as specified in TM 9-1340-202-12. (Shoe adapters are not used with the M66 or the M66A1 rocket motor assemblies.)

### 19. Loading Procedure

The rocket is loaded on the launcher by using the wrecker or the M405 handling unit. The loading procedures are described in a and b below.

a. Loading with the Wrecker.

(1) Position vehicles according to the terrain of the loading point. There is no set procedure for positioning the launcher and wrecker. It is desirable, however, to select positions which minimize the distance the wrecker boom must be extended to accomplish the loading operation. The maximum permissible boom extension for the M62 or the M543 wrecker in loading a complete M31 rocket is 13 feet 6 inches; for the M50 rocket, 15 feet 6 inches. An example of vehicle positions is shown in figure 5.

(2) The duties of individual crew members in loading, when using the wrecker are shown in table I.

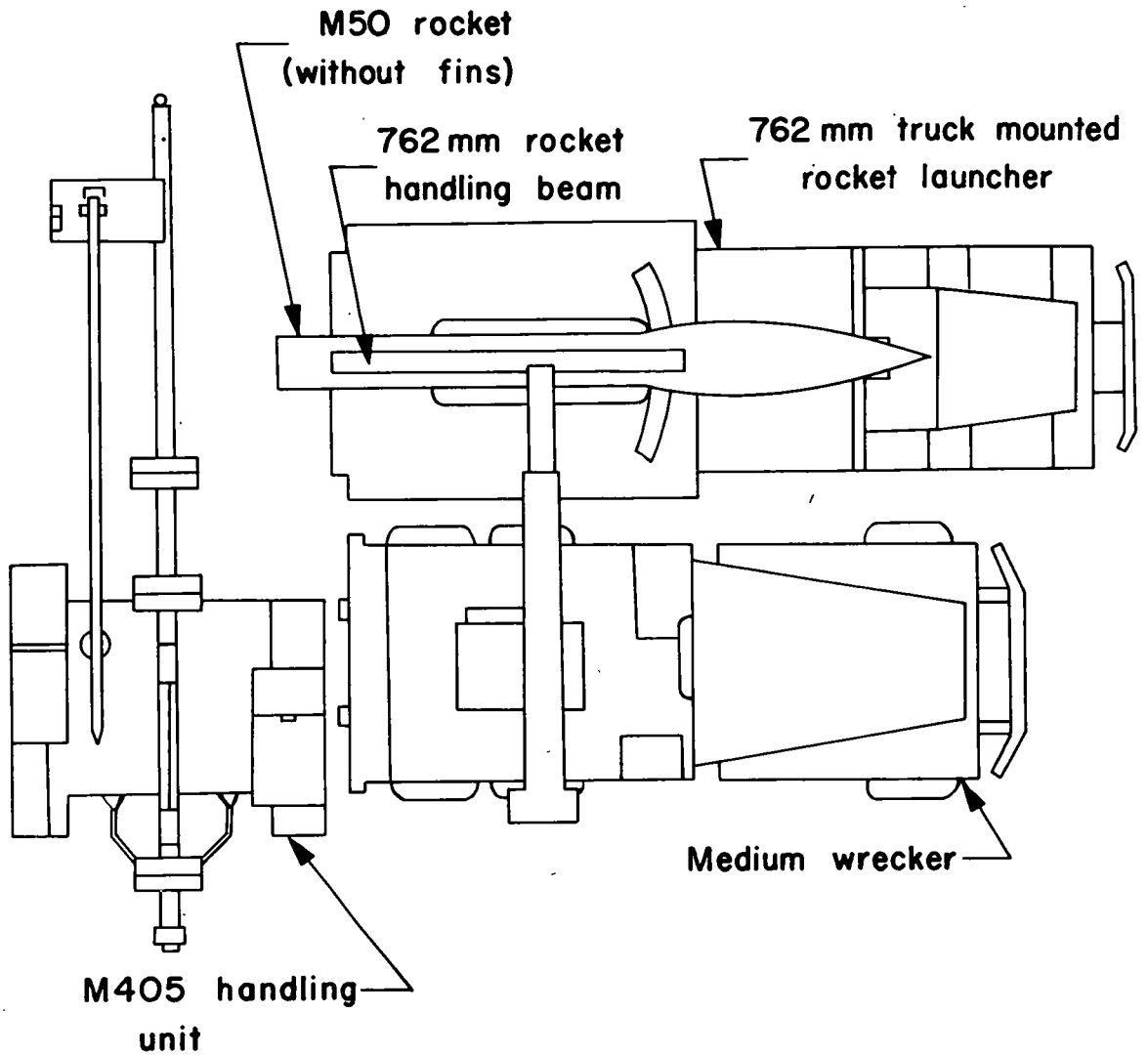


Figure 5. Position of vehicles for loading.

b. Loading with the M405 Handling Unit.

(1) Select a loading position which is as near level as possible. If the loading position is not level, the handling unit should be positioned so that it is on the uphill side of the launcher. If it is necessary to emplace the handling unit on the downhill side of the launcher, it must be secured to the launcher prior to loading. The handling unit can be secured to the launcher in the following manner:

(a) Secure a chain to the frame on the outside (with respect to the launcher position) of the M405 handling unit.

(b) Pass the chain over the top of the M405 handling unit and secure to the frame of the launcher.

(c) Tighten the chain with the hand

winch (come along) provided as on equipment materiel (OEM) for the M405 handling unit.

(2) Position the handling unit parallel to the left side of the launcher, maintaining from 7 to 15 inches between the two vehicles. The handling unit must be headed in the same direction as the launcher and positioned so that the alinement marks for the appropriate rocket motor on the handling unit and the left rear fender of the launcher are alined.

(3) See TM 9-1055-205-10 for detailed procedure in loading. The duties of individual crew members using the M405 handling unit, are shown in table II.

## Section II. PREPARATION FOR ACTION

### 20. General

a. The launchers of a battery normally will be put into position individually under the direction of the section commanders and chiefs of sections. The sight mount on the launcher should be positioned over the surveyed point in the firing position. A centerline should be established on the ground to aid the launcher driver and the section chief in orienting the launcher in the general direction of fire. This can be accomplished by placing engineer tape on the ground in the direction of fire. Each launcher is directed into position by the chief of section. Hand signals for guiding vehicles are given in FM 21-60. The launcher is directed into position by the chief of section. Hand signals for guiding vehicles are given in FM 21-60. The launcher can be emplaced on 10° forward, rear, or lateral slopes (fig. 6). The launcher can be traversed 267 mils left or right without requiring repositioning during a mission. The launcher must be cross-leveled when loading or firing.

b. The general duties and instructions given in paragraphs 7 and 9 apply to preparation for action. A detailed description of certain duties performed during operation for action is contained in paragraphs 24 through 26.

### 21. Prepare for Action

a. After the launcher has been directed into position by the chief of section, preparation for action is initiated without command. The duties of individual crew members are given in (1) table III, when the unit has the AN/MMQ-1 low-level wind equipment and (2) table III, when the unit has the AN/PMQ-6 windset equipment. Each man takes his post (fig. 4) upon completion of his duties.

b. If preparation for action is not desired, the command DO NOT PREPARE FOR ACTION must be given.

c. The low-level wind measuring set is prepared for action in accordance with TM 11-6660-203-10. For duties of personnel, see table IV.

d. If it is impractical to load the launcher prior to occupation of position and if the mated rocket is available, loading (table I or table II) is performed following sequence 2 in (1), table III. The following duties are eliminated under these conditions:

(1) Tables I and II.

(a) All steps pertaining to placing the launcher platform assemblies in the extended position and returning the launcher platform assemblies to the traveling position.

(b) All steps pertaining to positioning the traveling clamps and installing the strap assemblies on the rocket after it is placed on the launcher.

(2) Table III. All steps pertaining to releasing the traveling clamps and removing the strap assemblies on the rocket.

e. If the mated rocket is not available on completion of sequence 2, (1), table III, crewmen should complete all assigned duties in (1), table III, which can be performed without a rocket.

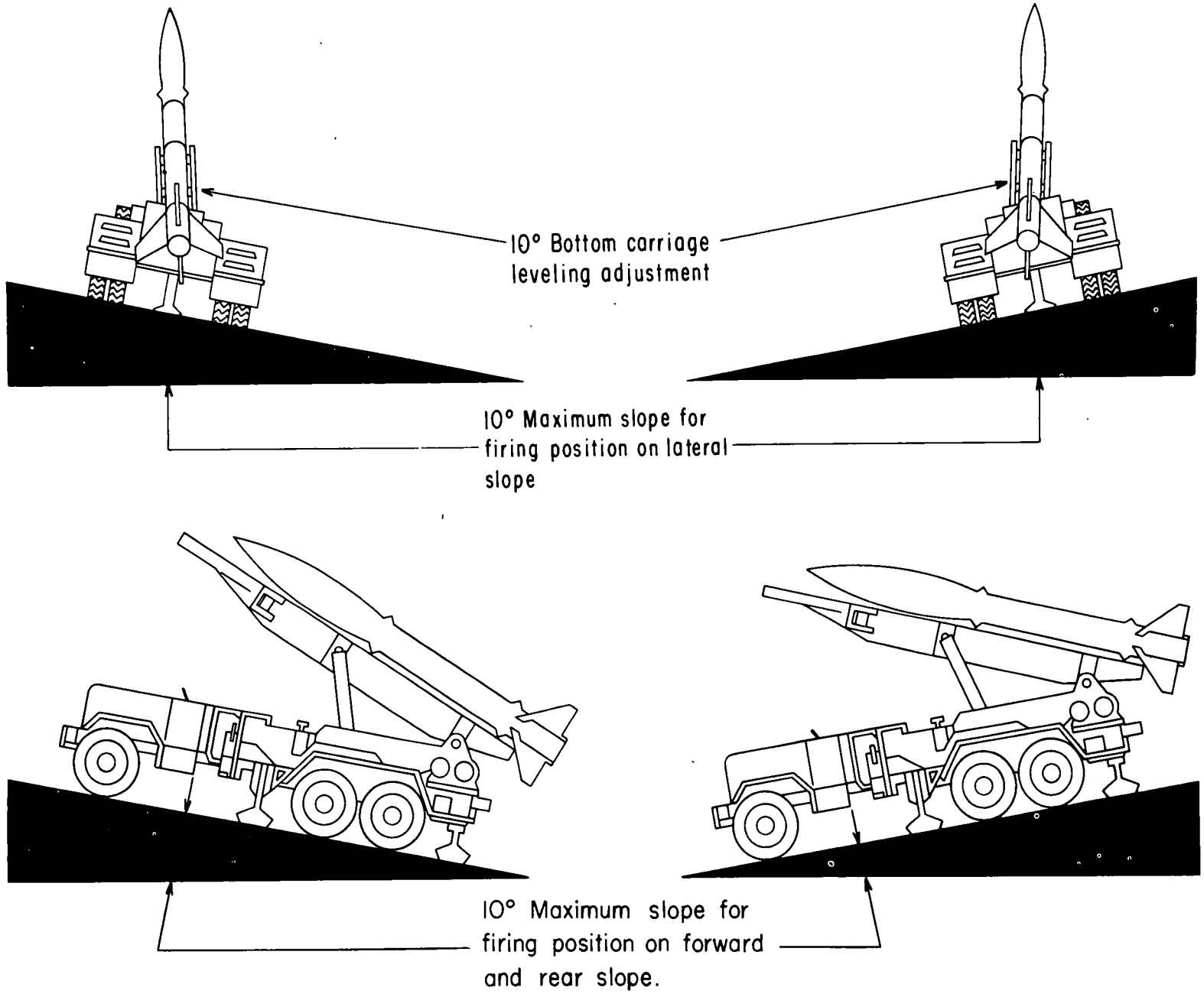


Figure 6. Maximum emplacement angles, launcher M386.

## Section III. DUTIES IN FIRING AND MARCH ORDER

### 22. Duties in Firing

The duties of individual crew members in firing are shown in table V.

### 23. Duties in March Order

The duties of individual crew members in preparing for travel are shown in tables VI and VII.

## Section IV. DETAILED DESCRIPTION OF CERTAIN DUTIES

### 24. Duties of the Chief of Section

a. Measures the Site to Mask. The command is MEASURE THE SITE TO MASK. The chief of section directs gunner No. 2 to traverse and elevate the launcher rail until his line of sight, along the rail, just clears the highest crest within traverse limits. He then directs No. 1 to measure the elevation. The elevation is reported to the section commander as the site to mask. If it is necessary to move the launcher to fire on a target outside the traverse limits, the site to mask must again be verified. The new site to mask will immediately be reported to the section commander, if it is greater than the previously reported site. When the section prepares the position prior to occupation, the site to mask should be determined with an aiming circle as part of the preparation.

b. Identifies the Aiming Point to the Gunner. When an aiming point (other than the aiming circle) has been designated by the section commander, the chief of section will insure that he has properly identified the point designated. He will then identify it to the gunner. If there is any possibility of misunderstanding, the chief of section will identify the point by turning the panoramic telescope until the horizontal and vertical hairlines are on the point designated. A distant aiming point should be used only as a secondary means for referring the launcher.

c. Reports Mistakes and Other Unusual Incidents to the Platoon Commander. If for any reason it appears that the rocket cannot be fired, the chief of section will promptly report this fact and the reasons therefor to the section commander. If it is discovered that a rocket has been fired with a mistake in laying, the chief of section will immediately report the nature and magnitude of the error to the section commander; for example, "Sir, error in deflection, 54 mils Deflection 2828 was fired instead of 2882." He also reports unusual incidents that affect the service of the launcher.

d. Records Basic Data. The chief of section will record data of a semipermanent nature in a notebook. These data will include—

(2) Aiming point(s) used, with reference deflection(s).

(3) Safety limits in deflection and elevation.

(4) Rockets fired.

(a) Number.

(b) Date and time of firing.

(c) Rocket motor type, lot number, serial number, and stenciled weight.

e. Assigns Duties When Firing is Conducted With a Reduced Number of Personnel. When the number of section personnel is reduced below that indicated, the chief of section will combine the duties to best facilitate the service of the launcher.

f. Verifies Adjustment of Sighting and Fire Control Equipment. Tests and adjustments of sighting, and fire control equipment specified in TM 9-1055-205-10 and chapter 6 of this manual must be performed regularly. The chief of section is responsible for the conduct of the prescribed tests and adjustments. He reports all unusual results to the section commander.

g. Controls Movement of the Launcher. The launcher should be laid on an initial azimuth as close to the center of sector and center of traverse as possible. If it becomes necessary to move the launcher the chief of section instructs the driver and controls

the displacement by either voice or hand signals.

h. Supervises Preparation of the Rocket and Warhead. The chief of section is responsible that all prescribed rocket and warhead tests and checks are completely performed.

25. Duties of the Gunner

a. Centers the Cross- and Longitudinal-Level Bubbles on Panoramic Telescope Mount. The gunner initially centers the cross- and longitudinal-level bubbles on the telescope mount as part of all operations involving use of the panoramic telescope. The bubbles are always centered and leveling is verified prior to using the sight and before firing. See TM 9-1055-205-10 for a description of the telescope and mount.

b. Zeros the Sight. The gunner—

(1) Alines the movable azimuth micrometer index (gunner's aid) with the right (fixed) index.

(2) Loosens the slipping micrometer scale locking nut by turning it counterclockwise while firmly holding the azimuth micrometer knob with his right hand.

(3) Slips the slipping micrometer scale until its zero mark is in coincidence with the left index. tightens the locking nut. and verifies the alinement of the zero mark on the scale with the left index.

(4) Turns the azimuth micrometer knob so that the left index and the zero mark of the slipping micrometer scale are alined with the zero mark of the gunner's aid on the right index.

(5) Opens the door; with the azimuth micrometer knob or rotating head, sets the nonslipping azimuth scale at 0 and then closes the door.

(6) Loosens the slipping azimuth scale locking screw; moves the slipping azimuth scale until its zero mark coincides with the index on the outside of the door.

(7) Tightens the locking screw and verifies the reading. With the sight thus zeroed, the gunner will set and read deflections (hundreds of mils) on the slipping azimuth scale at the index on door; he will also set and read the two digits of the deflection (tens and units) on the azimuth micrometer scale.

c. Lays the Launcher for Direction. The section commander commands, AIMING POINT THIS INSTRUMENT, Number ( ), DEFLECTION ( ). After the sight has been zeroed (b above), the gunner sets the announced deflection on the panoramic telescope by disengaging the throwout lever and turning the rotating head to the announced 100-mil graduation. He releases the throwout lever and, using the azimuth micrometer knob turns off the last two digits of the deflection on the azimuth micrometer scale. He then traverses the launcher until his line of sight through the telescope is on the center of the objective lens of the aiming circle. He checks to insure that the bubbles are level and announces, "Sir, number ( ) ready for recheck." As additional deflections are announced by the section commander, the gunner sets them on the sight and traverses the launcher until the vertical reticle of the sight is on the aiming circle. After the section commander announces, "Number ( ) is laid," the launcher should not be traversed except on order of the section commander.

d. Sets a Deflection on an Aiming Point After the Launcher Has Been Laid.

(1) After the launcher has been laid (c above), the section commander commands DEFLECTION 2800. At this command the gunner loosens the locking screw of the slipping azimuth scale and moves the scale until 2800 is in coincidence with the index on the door. The gunner then unlocks the slipping azimuth micrometer scale locking nut and moves the slipping azimuth micrometer scale to 0; he then tightens the locking nut and verifies that the zero mark is in coincidence with the index and that the reticle is still on the aiming circle.

(2) After the launcher has been laid (c above) and the section commander selects an aiming point other than the aiming circle, he may command AIMING POINT, LONE TREE, REFER. At this command the gunner refers the sight to the LONE TREE and reports the deflection to the section commander. The section commander commands DEFLECTION 2800. The gunner then alines the scales of the site as outlined in (1) above.

e. Reads and Reports Propellant Temperature. The gunner removes the M2 thermometer installed in the motor nozzle, reads the propellant temperature, reports the temperature reading to the chief of section, and places the thermometer in its case.

f. Sets or Changes the Deflection. The command to announce deflection is DEFLECTION (So much). If, for example, the command is DEFLECTION 2683, the gunner disengages the throwout lever with his left thumb and turns the rotating head of the sight to 26 (2600). He releases the throwout lever and, with his right hand, turns off the remaining 83 mils on the micrometer scale. He then traverses the launcher until the vertical reticle is on the aiming point and checks to see that the bubbles are level. The gunner must be careful that the last turn of the traverse mechanism causes the vertical reticle of the telescope to approach the aiming point from the left in order to take up any lost motion.

g. Refers the Launcher. The command from the section commander to refer the launcher is AIMING POINT THIS INSTRUMENT (or other point), REFER. With the bubbles level and without disturbing the lay of the launcher, the gunner turns the sight until the vertical reticle is on the point designated. He then reports the deflection to the section commander, "Sir, number ( ), deflection ( )."

h. Reports Launcher Laid and Ready to Fire. When the final firing data have been applied to the launcher, the gunner verifies the laying, removes the telescope from the mount, and reports to chief of section, "Launcher laid and ready to fire."

26. Duties of Number 1.

a. Lays the Launcher for Initial and Final Quadrant Elevation.

(1) The command to lay the launcher for elevation is QUADRANT (So much), for example QUADRANT 361. Number 1 sets the upper edge of the index plate opposite the 360 mark on the graduated arc of the quadrant frame, and turns the micrometer knob on the index arm to 1. Care must be taken to use the same side of the quadrant in setting both the index plate and the micrometer knob.

(2) Number 1 then pulls the elevating shifter rod out to the power elevate position.

(3) With the announced quadrant elevation set on the gunner's quadrant, No. 1 places the quadrant on the quadrant seats at the right reat of the launcher beam. The words 'line of fire' must be at the bottom of the quadrant and the line-of-fire arrow must be pointing in the direction of fire. Number 1 must be sure to use the arrow which appears on the same side of the quadrant as the scale he is using. He stands squarely opposite the side of the quadrant and holds it firmly on the quadrant pads, parallel to the longitudinal axis of the launcher rail. It is important that he take the same position and hold the quadrange in the same manner for each subsequent setting so that in each case he will view the quadrant bubble from the same angle.

(4) Number 1 then directs the launcher driver to power elevate or depress the launcher beam until the bubble is approximately centered. He then pushes the elevating shifter rod into the manual elevate position and manually elevates or depresses the launcher beam to exactly center the bubble, being careful that the last motion is in the direction in which it is more difficult to turn the hand wheel.

b. Measures the Quadrant. At the command MEASURE THE QUADRANT, No. 1

places the gunner's quadrant on the quadrant pads at the right rear of the launcher beam and performs the following operations:

(1) Moves the index arm of the gunner's quadrant until the bubble passes to the end of the vial away from the index arm hinge.

(2) Lowers the index arm slowly until the bubble just passes to the end of the vial toward the hinge.

(3) Turns the micrometer until the bubble is exactly centered.

(4) Removes the gunner's quadrant and reports the quadrant to the nearest one-tenth mil.

# CHAPTER 5

# TECHNIQUES AND SITUATIONS THAT REQUIRE SPECIAL ATTENTION

## 27. General

It is not feasible to fire a round-by-round cannon artillery type of adjustment with the 762-mm rocket. Therefore, precise and accurate procedures assume added significance.

## 28. Precision in Laying

a. Sighting and laying instruments and elevating and traversing mechanisms must be properly operated to reduce the effects of lost motion. For uniformity and accuracy, the last motion in setting instruments and in laying for deflection should always be from left to right. The last motion in elevating the launcher is in the direction in which it is more difficult to turn the handwheel. To insure accurate laying, personnel who lay the launcher must be required to verify the laying just prior to firing.

b. The line of sight in setting and reading a scale or centering a bubble should be at a right angle to the scale or level vial to prevent parallax errors. Bubbles should be centered exactly.

c. For uniformity and accuracy in laying on the aiming circle, the vertical reticle of the panoramic telescope should be centered on the objective lens of the aiming circle.

d. When setting deflections, the last motion of the sight must be in the direction of increasing deflection.

## 29. Distant Aiming Points

After the launcher has been initially laid for direction (par. 25), it may be referred to one or more distant aiming points. The aiming point must have a sharply defined point or vertical line which is clearly visible from the launcher so that the vertical reticle of the panoramic telescope can be alined on exactly the same place on the aiming point each time the launcher is relaid. The distant aiming point must be of sufficient distance (at least 2,000 meters) from the position area so that normal displacements of the panoramic telescope due to traverse will not cause an error in direction of more than one-half mil. An advantage of using a distant aiming point is that it may be used immediately upon occupation of position. Disadvantages of using a distant aiming point are that it may be obscured by darkness, dust, fog, or smoke and illumination is not practical.

## 30. Cease Firing

The command CEASE FIRING normally is given to the firing section by the chief of section, but in emergencies anyone present may give the command. At the command CEASE FIRING, regardless of its source, all preparation for firing will cease immediately. If CEASE FIRING comes from the fire direction center (FDC), preparation for firing is resumed at the announcement of the quadrant elevation by the FDC. If CEASE FIRING comes from within the section, the section commander will investigate the condition which caused the command to be given. When the condition has been corrected, preparation for firing is resumed by the section commander's announcement of the quadrant elevation.

## 31. Changes in Data During Preparation for Firing

If it is necessary to correct any element of firing data previously ordered but not yet executed, the command CEASE FIRING is given, followed by the corrected data. Preparation for firing is resumed at the announcement of the quadrant elevation.

## 32. To Unload the Rocket

Once a rocket has been prepared for firing, every effort should be made to fire it.

When circumstances prevent firing, the rocket will be disarmed in accordance with the procedures specified in TM 9-1340-202-12 and, if required, unloaded from the launcher in accordance with the procedures specified in TM 9-1055-205-10.

Caution: The assembly specialists must accomplish all procedures until the rocket motor is disarmed and the fuzing system has been safed. All other personnel must remain clear of the launcher during these operations. The launcher must not be moved, except to depress the launcher beam, until disarming is complete.

33. Care and Storage of Ammunition

a. No provisions have been made for long-term storage of rockets in the battery or battalion. Handling units are provided for limited storage of rockets in the rocket assembly position. Rockets are stored on handling units and all are pointed in the same direction until they are needed at the firing position. If the number of rockets on hand in the battery area exceeds the number of rockets required for assembly, the components which comprise complete rounds may be stored as units.

b. The shipping plug and plastic nozzle closure must be in place in the M31 rocket series.

c. The rocket components should be stored in accordance with the quantity-distance tables (TM 9-1340-202-12).

d. Storage at extreme temperatures should be avoided.

e. Specific temperature limits are as follows:

| | M31 rocket | M50 rocket |
|---|---|---|
| Firing . . . | 0° to 120° F | -30° to 100° F |
| Handling . . | 0° to 120° F | -40° to 120° F |
| Storage . . | -10° to 120° F | -65° to 130° F |

f. The launcher beam with an M31 rocket in place must be elevated to an 800-mil quadrant elevation prior to arming the warhead section to insure that the motor propellant grain is seated against the internal stops.

Caution: When an M66 motor assembly is placed in a container, the motor assembly must be guided so that the restraint socket on the nozzle is alined with the transportation restraint in the container. Misalinement of the motor with the transportation restraint may rupture the skin surface of the rocket motor.

34. Temperature Conditioning of Rockets

A temperature conditioned rocket is one in which the propellant temperature is uniform throughout the grain. A uniform temperature is essential to insure even burning of the propellant. If the rocket motor is improperly conditioned, the temperature gradient (differences in temperature throughout the propellant grain) will cause uneven burning and contribute to the thrust malalinement error. Further, variations in temperature gradients make it impossible to obtain valid propellant temperature measurements for use in computing temperature corrections. Heating blankets are provided for temperature conditioning purposes; proper use of these blankets is essential. The following procedures will produce the best results:

a. The rocket should not (unless absolutely necessary) be exposed to the direct rays of the sun or to a cold chilling wind. Exposure to such environments for even a short period of time will result in an improperly conditioned rocket.

b. Blankets should be installed when the rocket motors are drawn from the special ammunition supply point (SASP).

c. Blankets should not be removed from the rocket earlier than 15 minutes prior to firing.

d. Blankets should be used primarily as insulation (no heat applied) unless the ambient temperature goes below minimum permissible limits (par. 33c).

e. If it is anticipated that ambient temperatures will go below minimum storage limits, heat should be applied. The motor should be heated continuously for a minimum of 24 hours prior to firing. Heating for 48 hours is recommended.

Note: ALWAYS INSULATE. HEAT ONLY WHEN REQUIRED.

35. Installation and Removal of the Heating Blanket

Installation and removal of the heating blankets are accomplished by crewmen, supervised by the chief of section. Blanket sections A, B, C, D, E, F, G, G2, G3, G4, H, J, and K are used on the M50 rocket. Section J is used on the front of the rocket motor when the rocket warhead is removed. The procedure for installation and removal of the heating blankets is contained in pertinent launcher technical manuals.

36. Dropping the Rocket Motor

a. Extreme care must be taken to avoid dropping the rocket motor. Dropping a motor, whether crated or uncrated, may result in cracks in the propellant. Such cracks may cause malfunctions; therefore, if a motor is dropped and doubt exists as to the condition of the propellant, the motor should be suspended from use and reported to supporting ordnance unit.

b. A drop of 2 feet or more for the M31-series or a drop of any distance for the M50 is a cause for immediate suspension.

c. Requests for disposition instructions should include the distance the rocket motor was dropped, the type of surface upon which it was dropped, the ambient temperature, and a description of the damage to metal parts.

37. Camouflage

Standard camouflage procedures as prescribed in the FM 5-20-series apply to all standard equipment authorized the 762-mm rocket firing battery.

# CHAPTER 6
# BORESIGHTING AND BASIC PERIODIC TESTS

## Section I. GENERAL

### 38. Purpose and Scope

This chapter outlines the procedures for boresighting and basic periodic tests for on-carriage fire control equipment.

### 39. Equipment

The following equipment is needed for performing boresighting and periodic tests:

a. Boresighting Bracket Assembly. The section equipment includes two boresighting brackets and a light holder (TM 9-1055-205-10).

b. Tools. The section equipment includes all the necessary tools for boresighting and testing. Care must be taken to insure that the equipment is not damaged through carelessness or the use of improper tools.

c. Plumbline. The plumbline is essential in the basic periodic test to obtain maximum accuracy. Weights may be used to keep the line taut, and the tendency of the weight to swing may be decreased by placing the weight in a container filled with a liquid. Units in garrison may find it convenient to rig a permanent plumbline on a building.

## Section II. BORESIGHTING

### 40. General

a. Definition. Boresighting is the process of alining the line of sight of the panoramic telescope parallel to the longitudinal axis of the launcher rail. The launcher is boresighted before firing, and a boresight check should be made each time the launcher occupies a firing position.

b. Cross-Leveling. The launcher beam must be cross-leveled for boresighting. Approximate cross-leveling is accomplished by operating the cross-leveling handwheel to center the bubble in the bottom carriage level assembly. Final cross-leveling is checked by placing a gunner's quadrant set at 0 mils on the machined outer surface of the permanently mounted quadrant pad on the launcher beam. If necessary, the cross-leveling handwheel is used to center the bubble in the gunner's quadrant. The launcher beam is cross-leveled when the bubble is centered.

### 41. Boresighting in Daylight

The distant aiming point method is normally used in boresighting the launcher in daylight when weather permits. The procedure is as follows:

a. Install the front and rear boresight brackets to the rear of the points where the front and rear shoes of the rocket leave the launcher rail.

b. Cross-level the launcher beam (par. 40b).

c. Center the cross- and longitudinal-level bubbles on the M30 sight mount.

d. Traverse and elevate the launcher beam until the vertical hairline in the front boresight bracket and the gunner's line of sight through the peephole of the rear boresight bracket are alined on a distant aiming point (at least 2,000 meters distant).

e. Zero the scales on the panoramic telescope (par. 25b), and aline the vertical reticle of the sight on the distant aiming point by using the sight mount tangent screws. (Remove boresight brackets if necessary in order to see the aiming point.)

f. Replace the rear boresight bracket (if removed in e above). If the vertical reticle in the telescope does not coincide with the scribed line on the rear boresight bracket, turn the micrometer knob on the telescope to obtain coincidence. Record this deflection for use when boresighting at night or in inclement weather (par. 42). If the recorded deflection differs from zero by more than 2 mils, the curvature of the launcher beam should be checked.

42. Boresighting at Night or in Inclement Weather

The standard angle method must be used for boresighting at night or when no distant aiming point is visible. The procedure is as follows:

a. Install only the rear boresight bracket.

b. Perform the steps in paragraph 41b and c.

c. Install the night lighting device on the rear boresight bracket, if necessary.

d. Set the sight to zero or to the deflection recorded in paragraph 41f if it is other than 0.

e. Aline the vertical reticle of the sight on the lighted peephole or the scribed line of the rear boresight bracket by using the tangent screws on the sight mount.

## Section III. BASIC PERIODIC TESTS

43. General

Basic periodic tests are performed by the section under the supervision of the section commander. These tests are performed at the discretion of the unit commander. Suggested frequency of the tests is once each month if the launcher is used only for non-firing training; once every week if the launcher is used for firing; and as soon as possible after extensive use, accidents, or traveling over extremely rough terrain. These tests reveal whether the on-carriage fire control equipment and the gunner's quadrant are in correct adjustment. Preparations for the tests include:

a. Accurately cross-leveling the launcher, using the gunner's quadrant. The cross-leveling should be checked carefully since the tests prescribed in paragraphs 44 through 51 are dependent onthe trunnions being accurately leveled at all times.

b. b. Boresighting the launcher (par. 41).

44. Test of the Gunner's Quadrant

The gunner's quadrant must be in proper adjustment before testa and adjustments of other sighting and fire control equipment are conducted. Inspect the shoes of the gunner's quadrant for dirt, nicks, or burrs. Similarly, inspect the quadrant sets on the launcher beam and the quadrant mount.

45. End-for-End Test, Gunner's Quadrant

a. Set both the index arm and the micrometer scale of the gunner's quadrant at zero, making sure that the auxiliary indexes match.

b. Place the quadrant on the quadrant seats at the rear of the launcher beam and center the quadrant bubble.

c. Reverse the quadrant on the pad (turn it end for end). If the bubble recenters, the quadrant is in adjustment and the test of the quanner's quadrant is complete.

d. If the bubble does not recenter, try to center it by turning the micrometer knob. If the bubble centers, read the black figures and divide by 2. The quotient is the correction. Place the correction on the micrometer and level the launcher beam. Check by again reversing the quadrant. The bubble should center.

e. If the bubble does not center (d above), move the arc down one graduation (minus 10 mils). Turn the micrometer until the bubble centers. Add 10 to the reading on the micrometer and divide the sum by 2. The quotient is the correction. Place this correction on the micrometer, leaving the arm at minus 10; center the quadrant bubble by elevating or depressing the launcher beam. Check by reversing the quadrant on the quadrant seat; the bubble should center.

f. If the correction of error amounts to more than plus or minus 0.4 mil, send the quadrant to an ordnance unit for repair.

46. Micrometer Test, Gunner's Quadrant

a. Set the index arm to read 110 mils on the graduated arc and set the micrometer scale at zero.

b. Place the quadrant on the quadrant mount seats with the line-of-fire arrow pointing toward the front of the launcher, and center the bubble by using the elevating mechanism.

c. Set the index arm at 100 on the graduated arc and turn the micrometer one revolution to read 10 mils.

d. Reseat the quadrant on the quadrant seat. The bubble should center.

Caution: Do not disturb the laying of the launcher beam.

e. If the bubble does not center, the micrometer is in error and must be adjusted by ordnance personnel.

47. Comparison Test, Gunner's Quadrant

Compare readings from one gunner's quadrant obtained at low, medium, and high elevations with readings measured by all other quadrants of the battery on a single launcher at the same elevations. Any quadrant differing from the average by more than 0.4 mil at any elevation should be sent to ordnance for adjustment.

48. Correction, Gunner's Quadrant

When a gunner's quadrant requires a correction as determined by the end-for-end test, this correction is carried during firing and is applied by the chief of section to the command received from the FDC and to all quadrant elevations set on the launcher.

49. Test of Panoramic Telescope and Mount

a. The purpose of this test is to—

(1) Determine whether the azimuth compensating mechanism of the telescope mount actually transmits the motion of the launcher beam to the sight mount so that any deviation in deflection due to elevating the launcher beam is corrected throughout all elevations.

(2) Check the adjustment and mounting of the telescope mount, the setting of the cross-level and longitudinal-level vials, and the alinement of the telescope socket.

(3) Reflect total errors of the entire mechanism.

b. Because compensating errors of the various parts of the mount may result in the weapon testing out properly, the tests specified in paragraphs 50 and 51 should always be performed regardless of the results of the telescope and mount test. This provides for dividing the total errors found into errors in specific parts.

c. The general test is performed as follows:

(1) Boresight the weapon (pars. 41 and 42).

(2) Cross-level the launcher and check with a previously tested gunner's quadrant (par. 40b).

(3) Level the telescope mount bubbles and refer to a clearly defined distant aiming point.

(4) Elevate the launcher beam to maximum elevation in 100-mil steps. At each step, level the mount bubbles and note the deviation of optical axis of sight from the aiming point. Deflection deviation is measured on the azimuth micrometer scale; allowable deviation is one-half mil.

50. Basic Test for the Panoramic Telescope Mount

a. Cross-Level Test. Center the cross-level bubble and turn the longitudinal-level knob throughout its limit of motion. The cross-level bubble should remain centered within one-half vial graduation.

b. Pivot Alinement Test. Center the cross-level bubble and place the line of sight of the panoramic telescope on a sharply defined aiming point. (Plumbline may be used.) Elevate the launcher beam to maximum elevation while keeping the telescope mount level longitudinally.

Note. Do not readjust the cross-level bubble after the initial setting. Check at low, medium, and high elevations of the launcher beam. The line of sight of the panoramic telescope should not deviate more than one-half mil, and the cross-level bubble should remain centered within one-half vial graduation.

c. Vertical Alinement Test of Telescope Mount. Set the launcher beam at 100-mils elevation and level the telescope mount bubbles. Operate the cross-leveling knob throughout its limit of motion. The longitudinal-level bubble should remain centered

within one-half vial graduation.

d. Telescope Mount Socket Alinement Test. With the panoramic telescope scale set at zero, traverse the launcher until the vertical reticle of the telescope is on the plumbline (or aiming point) with both the cross-level and longitudinal-level bubbles centered. Sight through the telescope and rotate the elevatino micrometer knob throughout its limits of motion. The vertical reticle should remain on the plumbline (aiming point) within one-half mil. Set the panoramic telescope scales at 1,600 mils, and sight on the plumbline (aiming point) with both the cross-level and longitudinal-level bubbles centered. Rotate the elevation micrometer knob throughout its limits of motion. The vertical reticle should stay on the plumbline (aiming point) within one-half mil.

51. Basic Test for the Panoramic Telescope

a. Basic Test for the Panoramic Telescope. Zero the scales on the panoramic telescope. Traverse the launcher beam as necessary to place the panoramic telescope reticle on an aiming point. Rotate the telescope head through a complete circle (6,400 mils). The telescope reticle should return to the aiming point within 1 mil. Rotate the telescope head through a complete circle in the opposite direction. The telescope reticle should again return to the aiming point within one-half mil.

b. Panoramic Telescope M12A7C Parallax Test. Sight through the telescope at any convenient target at least 100 meters from the telescope. Move the eye about one-quarter of an inch from side to side and up and down at the normal eye distance from the eyepiece while continuing to look through the telescope. If the reticle appears to move with respect to the reference point on the target, parallax is present and renders the telescope inaccurate. The telescope will be turned in to the supporting ordnance unit.

52. Procedure When Tests Exceed Tolerances

If the telescope mount or panoramic telescope exceeds the tolerances prescribed (pars. 50 and 51) or any of the tests outlined, the launcher and/or panoramic telescope should be sent to ordnance for adjustment or repair.

53. Establishing Serviceability of the Launcher Beam

a. General. Detailed procedures for establishing beam serviceability are contained in TB 9-1000-212-20.

b. Definitions. The curvature direction of the launcher beam in the vertical or lateral plane is determined by the direction the forward tip of the beam is deflected. Terms regarding beam curvature are defined as follows:

(1) Curved downward or upward. In the vertical plane, when the rear tip is held stationary and the beam is so that the top of the two ends are lower than the top center of the beam, causing a hump, the beam is curved downward (fig. 7). When the top of the two ends are higher than the top center of the beam causing a sag, the beam is curved upward (fig. 8).

(2) Curved right or left. In the lateral plane, when the rear tip is held stationary and the beam is bowed so that the centerline of the front tip is displaced to the right of the centerline of the rear tip, the beam is curved right (fig. 9). Wen the centerline of the front tip is to the left, the beam is curved left (fig. 10).

c. Serviceability Standards. When a launcher beam is determined to be unserviceable, the launcher should be evacuated to ordnance. A launcher beam is unserviceable when curved—

(1) Downward in excess of 13/32 inch.
(2) Upward in excess of 3/16 inch.
(3) Right or left in excess of 3/8 inch.

d. Determination of Serviceability. Inspection by artillery personnel is only a means of determining serviceability of the launcher. Measurements must not be used to compute corrections for any malalinement noted. If the launcher is serviceable, no corrections for malalinement are necessary. If unserviceable, the launcher should be turned in to ordnance for disposition.

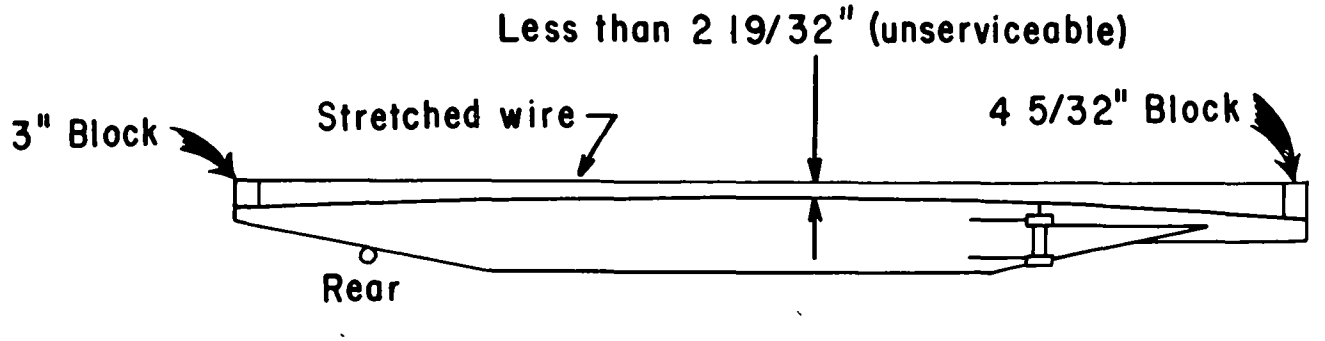


Figure 7. Forward tip of beam "curved downward", or center of beam "humped".

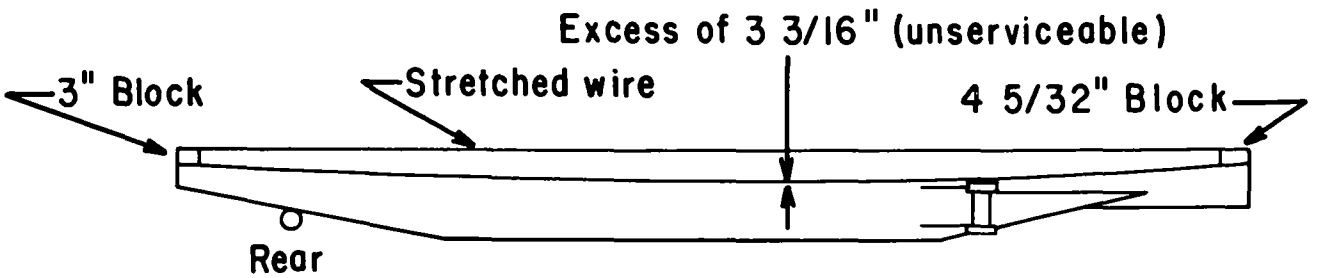


Figure 8. Tip of beam "curved upward" or center of beam "sagging".

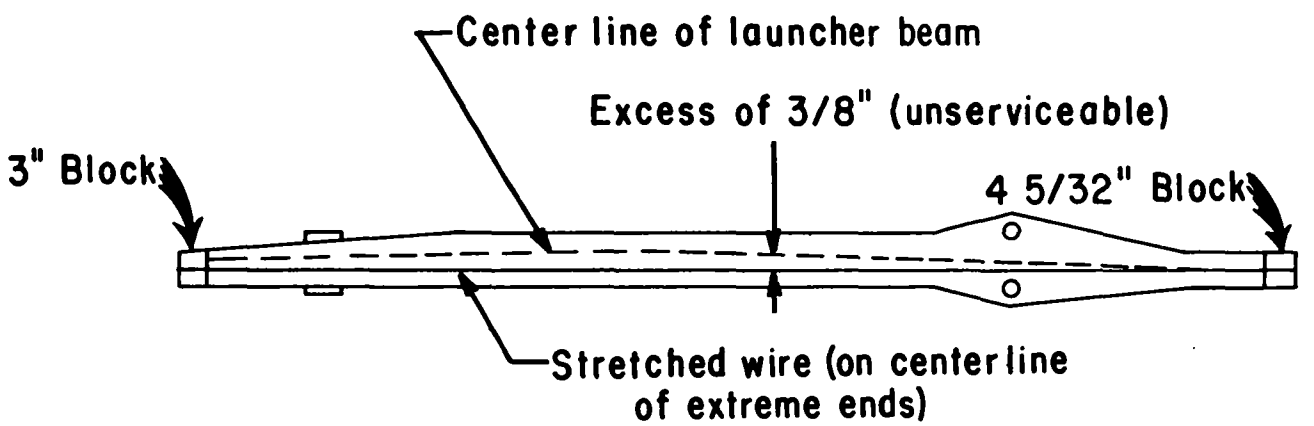


Figure 9. Forward tip of beam "curved right".

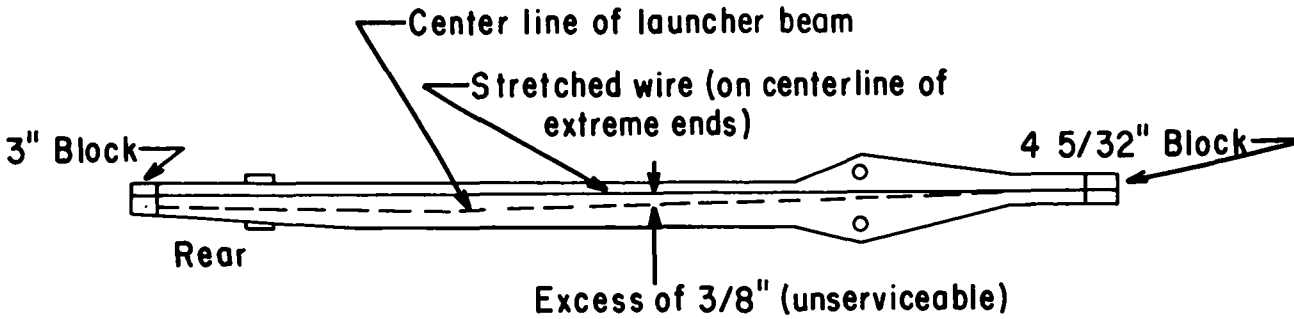


Figure 10. Forward tip of beam "curved left."

e. Equipment. Until a special gauge is made available, the procedures in f through i below are provided as a method for checking the launcher beam for serviceability. To perform the inspection locally, the following equipment is necessary:

(1) Two machined steel blocks—one 3 by 3 by 5 inches and one 4-5/32 by 3 by 1-7/8 inches.
(2) Piano wire, or wire which will stretch straight, of sufficient length to stretch the length of the launcher beam.
(3) A scale with graduations of 1/32 inch.
(4) A carpenter's square or triangle.

f. Preparation for the Inspection.

(1) Conduct the test in a shaded area to eliminate heat distortion from the sun shining on the beam.
(2) Elevate the launcher beam to approximately 125 mils.
(3) Center the 3-inch-high steel block on top of the rails at the extreme rear of the launcher beam.
(4) Cneter the 4-5/32-inch-high steel block at the extreme forward end of the launcher beam (hinged section) in the bottom of the groove.
(5) Center the piano wire over the steel blocks and stretch it taut to eliminate sag. Secure the wire.

g. Measurements in the Vertical Plane.

(1) To determine the condition of the launcher beam in the vertical plane take measurements every 2 feet along the length of the beam between the wire and the top surface of the rails and between the wire and the top surface of the launcher beam at the forward end and where there are no rails. The beam is constructed with a 5/8-inch stepdown and the forward end of the hinged section is tapered down towards the front 1/2 inch in every 46 inches.
(2) With the 5/8 inch subtracted from the dimensions obtained at the forward end of the rail, a perfectly straight beam measures 3 inches between the wire and the rail at the 2-foot intervals all along the rail except the tapered area.
(3) Any measurement indicating that the launcher beam is curved upward (fig. 8) or downward (fig. 7) in excess of the standard shown in c above indicates an unserviceable beam, and the launcher must be evacuated to ordnance.

h. Measurements in the Lateral Plane.

(1) To determine the condition of the launcher beam in the lateral plane, take measurements every 2 feet, as indicated in (2) below, along the of the beam, using a square and a scale.
(2) Since the stretched wire is centered at each end, it represents the center-

line of a straight beam. Dimensional deviation of the centerline of the beam. Dimensional deviation of the centerline of the beam to the wire indicates the amount of curve in the beam. Only the following edges are to be used in taking measurements:

(a) The outside edge of each of the four top rails (which are bolted on the top), which is 3-3/16 inches from the centerline of the beam.

(b) The inside edge of each of the long side rails (which are bolted on the sides), which is 7/16 inch from the centerline of the beam. (The short (18-inch) side rails may be omitted during checkout because of their short length).

(c) The outside top edge of the launcher beam machined surface (hinged section), which is 1-7/16 inches from the centerline of the beam.

(3) Any dimension which is more than 3/8-inch (figs. 9 and 10) in excess of, or less than, the dimensions given in (2)(a), (b), and (c) above indicates an unserviceable beam and the launcher must be evacuated to ordnance.

i. Frequency of Check. The launcher should be checked for serviceability at least once every 30 days under normal operation. The interval may be reduced during periods of extensive travel or operation in extremely hot or cold temperature. The interval may also be extended during periods of inactivity.

# CHAPTER 7
# MAINTENANCE AND INSPECTIONS

54. Requirements

Maintenance and inspections are essential to insure that the section is prepared to carry out its mission immediately. Systematic maintenance and inspection drills provide the best insurance against unexpected breakdown at the critical moment when maximum performance is essential.

55. Disassembly, Adjustment, and Assembly

Disassemblies and adjustments of the launcher authorized to be performed by battery personnel are prescribed in TM 9-1055-205-10 and supplemented by instructions contained in Department of the Army supply manuals. No deviation from these procedures is permitted unless authorized by the responsible ordnance officer.

56. Records

The principal records pertaining to the weapon are the Equipment Log Book; DA Form 2404 (equipment Inspection and Maintenance Work-sheet) and DA Form 2407 (Maintenance Request). For detailed information on the use of these forms, see TM 38-750.

57. Maintenance

For detailed instructions concerning maintenance of the 762-mm truck-mounted rocket launcher M386, see TM 9-1055-205-10, TM 9-2810, and LO 9-1055-205-10.

58. Inspections

Regular inspections are required to insure that materiel is maintained in serviceable condition.

a. The chief of section is responsible for the equipment within his section. He should inspect it thoroughly each day. If he sees the need for repair or adjustment, he notifies the section commander immediately so that the necessary corrective action may be taken.

b. The section commander should make a daily informal inspection. He inspects different parts of the materiel each day to insure complete coverage every few days. At least once a month, the section commander makes a thorough mechanical inspection of the launcher, section vehicles, ancillary equipment, tools, and spare parts.

c. Battery, battalion, and higher commanders should make frequent command is being maintained at prescribed standards of appearance, serviceability and completeness.

d. Inspections will be routine, thorough, and rapid by following the procedure outlined in this chapter. When the section os reduced in strength, the chief of section must reassign duties to insure that all maintenance steps are completed.

e. For details on inspecting the section equipment, see TM 9-1055-205-10, TM 9-1055-205-20, and TM 11-6660-203-35. Deficiencies found during inspections should be corrected promptly.

59. Operational Services

First-echelon maintenance on section vehicles as prescribed by a daily service is performed by the driver and the crew each day the vehicle is operated. This service is divided into three parts.

a. Before-operation service is a brief service to determine if the vehicle is ready for operation. At this time the chief of section verifies that sufficient equipment. tools, and rations are available and secured.

b. During-operation service consists of detecting any unsatisfactory performance of the vehicle.

c. After-operation service prepares the vehicle to operate again on a moment's notice. This is the basic daily service for the vehicle, and it is particularly important to detect deficiencies that developed during operation. All defects that the driver and crew cannot remedy must be reported at this time. The chief of section will resupply, as required, and verify that all equipment is present.

# CHAPTER 8
# DECONTAMINATION OF EQUIPMENT

60. General

a. Equipment contaminated with chemical, biological, or radiological agents constitutes a hazard to personnel and must be removed or neutralized.

b. Decontamination is the process of covering, removing, or destroying contamination or changing the contaminating agent or agents into harmless substances.

c. Decontamination must be started as soon as possible in order to reduce hazards and allow safe operation of equipment.

61. Decontamination of Toxic Chemical Agents

Table VIII prescribes the methods for decontaminating toxic chemical agents.

Table VIII. Decontamination of Toxic Chemical Agents

| Contaminated object | Preferred decontamination methods | Alternate decontamination methods | Field expedient methods |
|---|---|---|---|
| Canvas | Boil in soapy water for 1 hour.<br>Use 5 percent solution of household bleach for V-agents.<br>Use 5 percent solution of washing soda for G-agents. | Immerse in boiling water for 1 hour.<br>Launder by standard methods. Use DANC[1] solution or DS2[1].<br>Use slurry[2]. | Aerate (except for V-agents) |
| Clothing | Immerse and stir in boiling soapy water for 1 hour. Add 1 pound of soap to each 10 gallons of water.<br>Use 5 percent solution of bleach for V-agents.<br>Use 5 percent solution of washing soda for G-agents. | Launder by standard methods. Dry clean.<br>Use DS2 for cotton items only. | Rub M5 ointment on small contaminated areas. Aerate (except for V-agents). |
| Unpainted metals. | Use DS2 or DANC, then rinse or wipe with organic solvent[3], and dry. | Wash with cool, soapy water[3] and rinse. | Aerate. |
| Painted | Spray with DS2 or DANC solution. | Wash with hot, soapy water and rinse. (slurry may be used if it is removed within 1 hour and the surface is oiled.) | Aerate.<br>Weather. |
| Instruments | Clean with alcohol (or gasoline) and apply a thin coat of oil. | Wipe with rag dampened with DANC or DS2, dry with clean rag, and oil. | Weather. |

[1] These decontaminants are injurious to plastic and hard rubber.
[2] Equal weights of water and chloride of lime.
[3] Organic solvents (petroleum products) and water do not neutralize contaminants. Precautions must be taken to dispose of these solvents as contaminated materiel.

## 62. Decontamination of Biological Agents

Decontaminants and decontamination procedures for toxic chemical agents are effective against biological agents.

## 63. Decontamination of Radiological Agents

a. Radioactive contaminants cannot be made safe by chemical action. They must be removed or shielded, if it is impracticable to wait for natural decay.

b. Decontamination is the process of reducing the hazard by removing the contaminant or shielding against radiation. Methods for decontamination are given in table IX.

Table IX. Decontamination of Radiological Agents

| Method | Contaminated object | Technique | Remarks |
|---|---|---|---|
| Wash and scrub with water. | All nonporous surfaces (metal, paint, plastics). | Work from top to bottom and upwind. | Drainage must be controlled – water is contaminated. |
| Detergent (soap) solution. | All nonporous surfaces. | Heat water if possible. Rub surface and wipe dry. (Moist application is all that is desired; do not let drip). | Rags and runoff require disposal. |
| Organic solvents. (Petroleum | All nonporous surfaces. | Immerse or wash with solvent, then wash in hot soapy water, and rinse with clear water. | Vapor is toxic. Fire precautions are required. |
| Brushing | Porous and nonporous surfaces. | Brush or sweep dust from equipment or clothing. | Limited control of contaminated dust. Wear protective mask. |
| Hot spots may be reduced by sanding, filing, or grinding. These methods are not practical for large areas — a protective mask and gloves must be worn. | | | |
| Launder | Clothing. | Use hot soapy water and rinse with clear water. | Water requires disposal. |
| Bathing and scrubbing | Personnel. | Use brushes, running water, and soap. | Continue scrubbing until contamination level is safe. |

# CHAPTER 9
# DESTRUCTION OF EQUIPMENT

## 64. General

a. Tactical situations may arise in which it is necessary to abandon equipment in a combat zone. In such a situation, all equipment must be destroyed to prevent its use by the enemy.

b. Equipment will be destroyed only on the authority delegated by a division or higher commander.

## 65. Plans

A plan will be prepared by each battery to expedite destruction of equipment. The following principles must be considered in developing the plan:

a. The plan must be adequate, uniform, and easily executed.

b. Essential parts must be destroyed first.

c. Destruction must be as complete as possible.

d. The same essential parts must be destroyed throughout the battery.

e. Spare parts and accessories must be given the same priority as those installed on equipment.

## 66. Methods

a. The most generally applicable methods of destruction are —

(1) Mechanical—Requires ax, pick, sledge, or similar equipment.

(2) Burning—Requires gasoline, oil, or other flammables.

(3) Demolition—Requires ammunition or explosives.

(4) Gunfire—Requires artillery, rocket launcher, or rifle grenades.

b. In general, the destruction of essential parts, followed by burning, is sufficient to render the weapon useless.

c. Destruction of the 762-mm rocket involves the destruction of the highly sensitive propellant. For detailed methods of destruction, see TM 9-1340-202-12. If the nuclear warhead section is also to be destroyed, refer to TM 9-1100-200-12. If at all possible, the rocket should be fired to prevent capture even if there is no immediate target available.

# CHAPTER 10
# SAFETY

## 67. General

Safety precautions to be observed in training are prescribed in AR 385-62. Additional information on safety is found in FM 6-140 and TM 9-1900. Safety precautions peculiar to the 762-mm rocket are given in paragraphs 68 through 71.

## 68. Safety Data

a. Personnel and equipment must be kept clear of the propellant blast at the time of firing. The minimum safety limits for the M50 rocket are 300 meters to the front of the launcher, 90 meters to each side of the launcher, and 400 meters to the rear of the launcher. For the M31-series, the minimum safety limits are 100 meters to the front of the launcher, 90 meters to each side of the launcher, and 400 meters to the rear of the launcher. The 400-meter dimensions to the rear of the launcher may be reduced to 200 meters at the discretion of the unit commander.

b. During rocket checkout, the assembly specialist will keep in his possession the safety plug that enables him to operate the firing panel. To avoid accidental firing of the rocket, all personnel must remain clear of the blasting machine or the firing panel (as appropriate) until the chief of section indicates that the rocket is ready to be fired.

c. Extreme caution should be used in handling the igniter assembly, which contains black powder easily ignited by heat, friction, impact, or a static charge.

Warning: Disassembly of the igniter is prohibited.

d. The number of personnel engaged in the preparation of rockets for firing will be the minimum necessary to accomplish the operation.

e. Flammable liquids used in storage or assembly shelters will be kept in approved safety cans and will not be stored in the shelter.

f. Photo flashbulbs or photo floodlights will not be used in photographing operations when explosives or flammable liquids are present.

g. All rocket motors in administrative storage will be pointed in the same direction; i.e., the direction which would result in the least damage in event of accidental ignition of the propelling charge.

h. Care must be taken at all times to prevent rockets from being ignited by electrical currents from electric tools, lights, or cords.

i. Operations involving drilling equipment of any type will not be used in the modification of parts on a rocket containing explosives.

j. After the spin rockets are connected to the battery support assembly, all work on the rocket is accomplished from the left side.

## 69. Safety Features

a. Shorting Plugs. Shorting plugs are provided as a means of preventing the accumulation of stray voltage in the firing lines. Stray voltage can cause the rocket to fire prematurely. Shorting plugs must be removed for electrical tests of the rocket; at all other times they must be left in place until immediately prior to firing.

b. Rocket Motor Shipping Plug, M31 Rocket. The rocket motor shipping plug provides a forward release for the propellant gases in case of accidental ignition. This plug, made of steel with a brass insert, should not be removed until immediately prior to firing.

c. Motor Igniter, M50 Rocket. The rocket motor is shipped with the igniter installed. While the igniter is in the safe condition, a retainer holds it in place. In case of accidental ignition, the igniter will blow out, rendering the rocket motor nonpropulsive.

70. Misfires

a. In the event of a misfire, make an immediate attempt to fire again. If the rocket does not fire at once, proceed as follows:

(1) If power to the firing panel box M35 is provided by the vehicular battery, operate the vehicle motor and again attempt to fire. If the rocket does not fire, switch the M35 to BA 605/U power, using both batteries.

(2) If power to the M35 was initially supplied by BA 605/U batteries, proceed as follows:

(a) If only one battery were used, attempt to fire again, using two BA 605/U batteries. If the rocket does not fire, check to determine whether the batteries operated. If either or both failed to operate, replace the defective battery and attempt to fire. If both batteries operated and the rocket did not fire, switch the M35 to vehicular power, operate the vehicle motor, and attempt to fire again.

(b) If two batteries were used initially and both operated, switch to vehicular power, operate the vehicle motor, and attempt to fire again.

(3) If, after completing the procedures in (1) and (2) above and the rocket still fails to fire, wait 30 minutes before approaching the rocket.

b. While waiting, repeat the final continuity test.

c. After waiting 30 minutes, troubleshoot the electrical circuit to determine the cause of failure. If the fault is detected and repair effected, attempt to fire again. If the rocket still fails to fire, wait another 30 minutes and remove the igniter to the test pit and inspect and test it. If the igniter is faulty, replace it and attempt to fire.

d. If the rocket still fails to fire, wait 30 minutes, disarm the rocket, and remove it from the launcher to a safe location, and notify ordnance personnel.

71. Drill and Firing

a. Members of the section must be trained to stay clear of the propellant blast area in rear of the launcher (par. 68a).

b. In training, safety officers must be designated for each artillery unit that is firing. For duties of the safety officer, see FM 6-40.

# CHAPTER 11
# TRAINING

## Section I. GENERAL

### 72. Purpose and Scope

The purpose of this chapter is to present the minimum requirements for training the personnel of a firing section in the performance of their duties. It includes general information on the conduct of training and a minimum training schedule.

### 73. Objectives

The objectives are to train crewmen to perform their individual duties rapidly and, through drill, to weld them into an efficient, coordinated team able to function effectively in combat. During training, supervisors should keep in mind the proficiency sought in ATT 6-175. Maximum efficiency is attained through fundamental, repetitive drills.

### 74. Conduct of Training

a. Training will be conducted in accordance with the principles given in FM 21-5. The goal of training should be the standards set forth in FM 6-125, ATP 6-302, and AR 611-201.

b. In general, individual training is conducted by noncommissioned officers as far as practicable. Unit officers usually prepare training plans, conduct unit training, and supervise and test individual training.

c. Throughout training, the application of prior instruction to current training must be emphasized.

d. The training received by each individual in the section is the responsibility of the chief of section. Progress of the section must be frequently checked by the section commander to insure that required high standards of training are maintained. However, the section commander should be careful not to usurp the prerogatives and responsibilities of the section chief. The development of leadership and initiative is noncommissioned officers must be emphasized constantly throughout training.

## Section II. MINIMUM TRAINING SCHEDULE

### 75. General

The training schedule outlined in paragraph 77 is a guide to meet the minimum training requirements in subjects covered in this manual for personnel of a firing section.

### 76. Individual Periods

a. Individual periods of training in service of the launcher should be integrated with other unit training to form a well balanced training program.

b. In general, except for RSOP (reconnaissance, selection, and occupation of position), service practice, and crew drills, training periods on any subject should not exceed 1 hour.

c. Crew drill should be preceded and followed by training in subjects that are logically related to the drill. For example, a period of crew drill should be preceded by a period of testing and adjustment of sighting and fire control equipment and followed by a period on inspection and maintenance.

d. TM 9-1055-205-10 provides information on which to base periods of instruction on the description, characteristics, and functioning of the launcher; familiarization with the launcher, equilibrators, elevating mechanism, and sighting and fire control equipment; and field assembly and malfunction. These subjects should be included in the unit training schedule and should be closely allied with the training in service of

the launcher. Approximately 8 hours should be devoted to this instruction.

e. Additional service-of-the-launcher training may be performed during unit training exercises.

77. Training Schedule

| Method* | Periods | Subject | Text references | Training aids and equipment |
|---|---|---|---|---|
| C,D,PW | 1 (1-hour period) | Organization and composition of firing section; general duties of individuals; formation of firing section. | Pars. 6 and 7 | TOE section equipment, M405 handling unit, and M62 or M543 wrecker. |
| C,D,PW | 6 (4-hour periods) | Crew drill (duties in loading, preparation for action, indirect laying, firing, and march order). | Pars. 8-26 | Do. |
| C,D,PW | 5 (1-hour and 1/2-hour periods) | Testing and adjustment of sighting and fire control equipment. | Pars. 38-53 | Do. |
| C,D,PW | 4 (1-hour periods) | Inspection and maintenance drills. | Pars. 54-59 | |
| C,D,PW | 1 (1-hour period) | Decontamination of equipment. | Pars. 60-63 | Decontamination equipment and TOE equipment. |
| C,D,PW | 1 (1-hour period) | Destruction of materiel to prevent use by the enemy. | Pars. 64-66 | Demolition and TOE equipment. |
| C,D | 1 (1-hour period) | Safety precautions. | Pars. 67-71 | TOE equipment. |
| PW | 8 (8-hour periods) | RSOP and service prictice..... | All previous references. | Do. |
| C,PW | 6 (1-hour periods) | Review and tests of subjects previously covered. | All previous references. | Do. |

* C — conference; D — demonstration; PW — practical work.

# CHAPTER 12

# TESTS FOR QUALIFICATION OF GUNNERS

## Section I. GENERAL

### 78. Purpose and Scope

This chapter prescribes the tests to be given in the qualifications of gunners. These tests should be given to all members of the firing sections after completion of their individual training phase. The purpose of the tests is to —

a. Provide a means of determing the relative proficiency of the individual crew member in the performance of the duties of the gunner and in his knowledge of the rocket launcher M386. The tests will not be a basis for determining the relative proficiency of batteries or higher units.

b. Serve as an adjunct to training.

### 79. Standards of Precision

The candidates will be required to perform the tests in accordance with the standards listed in a through d below.

a. Scale settings must be exact, and matching indexes must be brought into coincidence.

b. Level bubbles must be exactly centered.

c. The vertical reticle of the panoramic telescope will be alined on the center of the objective lens of the aiming circle or exactly on the same part of the aiming point each time the launcher is laid.

d. Final motions of azimuth and elevation setting knobs and traversing and elevating handwheels must be made in the appropriate direction. The final motion of the elevating handwheel should be in the direction of the more difficult movement. Final motion for traversing is from left to right. Final movement of the vertical reticle of the telescope is from left to right.

### 80. Assistance

The candidate will receive no unauthorized assistance. Each candidate may select authorized assistants as indicated in the tests. If a candidate fails any test because of the fault of the examiner or any assistant, the test will be disregarded, and the candidate will be retested.

### 81. Time

The time for any test will be the time from the last word of the command to the last word of the candidate's report. The candidate may begin any test after the first word of the first command.

### 82. Scoring

Scoring will be conducted in accordance with the paragraphs titled "Penalties" and "Credit" under each test. If a test is performed correctly, credit will be given in accordance with the paragraph titled "Credit" under each test. No credit will be allowed if one or more of the conditions specified in the paragraphs titled "Penalties" exists.

### 83. Preparation for Tests

The launcher will be prepared for action and the candidate will be posted at the proper position for the test being conducted or as indicated in the paragraphs titled "Special instructions". The examiner will insure that the candidate understands the requirements of each test and will require the candidate to report, "I am ready," before each test.

### 84. Qualification Scores

Minimum scores required for qualification in the courses are as follows:

| Individual classification | Points |
|---|---|
| Expert gunner | 90 |
| First-class gunner | 80 |
| Second-class gunner | 70 |

85. Outline of Tests

| Section | Subject | Number of tests | Points each | Maximum credit |
|---|---|---|---|---|
| II | Indirect laying, deflection only .... | 18 | 2 | 36 |
| III | Laying for quadrant elevation with gunner's quadrant ..... | 4 | 4 | 16 |
| IV | Measuring site to the mask ..... | 1 | 6 | 6 |
| V | Measuring quadrant ..... | 1 | 6 | 6 |
| VI | Measuring deflection ..... | 2 | 5 | 10 |
| VII | Tests and adjustment of sighting and fire control equipment ..... | 4 | 4 | 16 |
| VIII | Materiel ..... | 1 | 10 | 10 |
| Total credit ..... | | | | 100 |

## Section II. INDIRECT LAYING, DEFLECTION ONLY

86. Scope of Tests

Eighteen tests will be conducted in which the candidate will be required to execute commands similar to those given in paragraph 88. Tests 1 through 4 (and tests 5-9, 10-13, and 14-18) will be executed as one series of commands.

87. Special Instructions

a. Commands will not necessitate shifting the launcher.

b. The examiner will select a suitable aiming point and identify it to the candidate.

c. The command for new deflections for each test will be within the following prescribed limits:

| Test number | Maximum change (mils) | Minimum change (mils) |
|---|---|---|
| 2 and 11 ..... | 180 | 140 |
| 3 and 12 ..... | 90 | 70 |
| 4 and 13 ..... | 40 | 20 |
| 7 and 16 ..... | 100 | 60 |
| 8 and 17 ..... | 50 | 30 |
| 9 and 18 ..... | 20 | 10 |

d. The launcher will be laid with correct settings at the conclustion of each test.

e. The examiner will designate the launcher that is to be used. The examiner will announce special corrections in deflection that are to be applied by the candidate.

88. Outline of Tests

| Test number | Examiner commands (for example) | Action of candidate |
|---|---|---|
| 1 and 10.... | DEFELECTION 2890 ..... | Sets deflection 2890. Centers cross- and longitudinal-level bubbles. Traverses launcher until vertical reticle is on the center of the objective lens of the aiming circle. Checks centering of bubbles. Relays if necessary. Calls "Ready" and steps clear. |

| Test number | Examiner commands (for example) | Action of candidate |
|---|---|---|
| 2 and 11.... | DEFLECTION 2746 ..... | Same as test 1 above (sets deflection 2746). |
| 3 and 12.... | DEFLECTION 2863 ..... | Same as test 1 above (sets deflection 2863). |
| 4 and 13.... | DEFLECTION 2829 ..... At conclusion of test 4(13) give CEASE FIRE, END OF MISSION. (No time considered for operation.) | Same as test 1 above (sets deflection 2829). Sets deflection 2800; lays on aiming circle. Checks centering of bubbles. Relays if necessary. |
| 5 and 14.... | AIMING POINT, CHURCH STEEPLE, REFER. | Refers telescope to church steeple. Reads deflection and calls "Number 1, deflection (so much)." |
| 6 and 15.... | DEFLECTION 2800, REFER | Slips the azimuth micrometer scale to 0. Slips the azimuth scale to 2800. Verifies that vertical reticle is on church steeple. Calls "Number 1, deflection 2800." Steps clear. |
| 7 and 16.... | DEFLECTION 2891 ..... | Same as test 1 above (sets deflection 2891). |
| 8 and 17.... | DEFLECTION 2853 ..... | Same as test 1 above (sets deflection 2853). |
| 9 and 18.... | DEFLECTION 2869 ..... | Same as test 1 above (sets deflection 2869). |

89. Penalties

a. No credit will be allowed if, after each test--

(1) The deflection is set incorrectly.
(2) The cross- or longitudinal-level bubble is not centered.
(3) The vertical reticle of the telescope is not on the aiming point or the center of the objective lens of the aiming circle, whichever is applicable.

b. No credit will be allowed if the last motion of the transverse handwheel was not made to the right.

90. Credit

a. Tests 1, 6, 10, and 15 (each).

| Time in seconds | Credit |
|---|---|
| 40 or less ..... | 2.0 |
| More than 40 but not more than 45 ..... | 1.5 |
| More than 45 but not more than 50 ..... | 1.0 |
| More than 50 ..... | 0 |

b. Tests 2, 3, 4, 5, 7, 8, 9, 11, 12, 13, 14, 16, 17, and 18 (each).

| Time in seconds | Credit |
|---|---|
| 25 or less ..... | 2.0 |
| More than 25 but not more than 30 ..... | 1.5 |
| More than 30 but not more than 35 ..... | 1.0 |
| More than 35 ..... | 0 |

## Section III. LAYING FOR QUADRANT ELEVATION WITH GUNNER'S QUADRANT

91. Scope of Tests

Four tests will be conducted in which the candidate will be required to execute commands similar to those given in paragraph 92.

92. Special Instructions

a. The gunner's quadrant will be set at 0 for the first test.

b. Each succeeding test will require a change of quadrant elevation setting within

the limits of 30 to 60 mils.

c. The candidate will be posted to the right of the launcher facing the quadrant seats, with the gunner's quadrant in hand.

d. An assistant (launcher driver) will be selected by the candidate to power elevate the launcher.

93. Outline of Tests

| Test number | Examiner commands (for example) | Action of candidate |
|---|---|---|
| 1 | QUADRANT 180 ..... | Sets quadrant elevation on gunner's quadrant. Seats quadrant. |
| | | Directs driver to elevate or depress the launcher beam until the quadrant bubble is approximately centered. Centers bubble with manual elevating handwheel. |
| | | Calls "Ready" and waits for examiner to verify laying. |
| 2 | QUADRANT 239 ..... | Same as test 1 above. |
| 3 | QUADRANT 196 ..... | Same as test 1 above. |
| 4 | QUADRANT 155 ..... | Same as test 1 above. |

94. Penalties

a. No credit will be allowed if, after each test—

(1) The quadrant elevation is set incorrectly.

(2) The quadrant is not properly seated.

(3) The quadrant bubble is not properly centered.

b. No credit will be allowed if the last movement of the launcher beam was not in the direction in which it is most difficult to turn the elevating handwheel.

95. Credit

| Time in seconds | Credit |
|---|---|
| 25 or less ..... | 4.0 |
| More than 25 but not more than 30 ..... | 3.0 |
| More than 30 but not more than 35 ..... | 2.0 |
| More than 35 ..... | 0 |

## Section IV. MEASURING SITE TO MASK

96. Scope of Test

One test will be conducted in which the candidate will be required to execute the command MEASURE SITE TO MASK (par. 98).

97. Special Instructions

a. The launcher, prepared for action, will be placed 200 to 400 meters from a mask of reasonable height.

b. The launcher beam will be pointed so that it is 100 to 150 mils above the crest and 100 to 150 mils right or left of the highest point of the crest.

c. The candidate will take his post at the rear of the launcher beam.

d. Assistants, selected by the candidate, will be posted to traverse and elevate the launcher beam.

98. Outline of Test

| Examiner commands | Action of candidate |
|---|---|
| MEASURE SITE TO MASK — | Sights along lowest element of launcher rail and has assistants operate elevating and traversing mechanisms until line of sight just clears crest. |
| | Measures elevation with gunner's quadrant. Reports "Number ( ) site to mask ( )." |

99. Penalties

No credit will be allowed if—

a. The line of sight along the lowest element of the launcher rail does not just clear the crest.

b. The longitudinal-level bubble is not properly centered.

c. The site is announced incorrectly.

d. The last movement of the launcher beam was not in the direction in which it is most difficult to turn the elevating handwheel.

100. Credit

| Time in seconds | Credit |
|---|---|
| 60 or less | 6.0 |
| More than 60 but not more than 70 | 4.5 |
| More than 70 but not more than 80 | 3.0 |
| More than 80 but not more than 90 | 1.5 |
| More than 90 | 0 |

## Section V. MEASURING QUADRANT

101. Scope of Test

One test will be conducted in which the candidate will be required to measure the quadrant elevation by means of the gunner's quadrant.

102. Special Instructions

Prior to the test, the examiner will lay the launcher at a selected quadrant, measure the quadrant, and then set the gunner's quadrant at 0.

103. Outline of Tests

| Examiner commands | Action of candidate |
|---|---|
| MEASURE THE QUADRANT..... | Places gunner's quadrant on seats. |
| | Levels bubble by raising or lowering the index arm and turning the micrometer knob. |
| | Announces "Number ( ), quadrant ( )" and hands quadrant to examiner. |

104. Penalties

No credit will be allowed if—

a. The quadrant bubble is not centered when the quadrant is seated properly.

b. The quadrant is announced incorrectly.

105. Credit

| Time in seconds | Credit |
|---|---|
| 10 or less | 6.0 |
| More than 10 but not more than 12 | 5.0 |
| More than 12 but not more than 14 | 4.0 |
| More than 14 but not more than 16 | 3.0 |
| More than 16 | 0 |

## Section VI. MEASURING DEFLECTION

106. Scope of Test

Two tests will be conducted in which the candidate will be required to measure and report a deflection in accordance with the command given in paragraph 108.

107. Special Instructions

a. The launcher will be laid on the aiming circle.

b. An aiming point within 200 mils to the left or right of the launcher will be designated by the examiner and identified by the candidate.

108. Outline of Test

| Examiner commands | Action of candidate |
|---|---|
| NUMBER ( ), AIMING POINT, THAT ( ), REFER. | Centers cross- and longitudinal-level bubbles. |
| | Refers to aiming point. |
| | Checks centering of bubbles and relays telescope, if necessary. |
| | Reads deflection and reports. "Number ( ), deflection ( )" and steps clear. |

109. Penalities

No credit will be allowed if—

a. The cross- or longitudinal-level bubble is not centered properly.

b. The vertical reticle of the telescope is not properly alined on the aiming point.

c. The deflection is announced incorrectly.

d. The traversing handwheel is turned.

110. Credit

| Time in seconds | Credit |
|---|---|
| 6 or less | 5.0 |
| More than 6 but not more than 7 | 3.0 |
| More than 7 but not more than 8 | 2.0 |
| More than 8 | 0 |

## Section VII. TESTS AND ADJUSTMENT OF SIGHTING AND FIRE CONTROL EQUIPMENT

111. Scope of Tests

Four tests will be conducted in which the candidate will be required to demonstrate the methods employed in making the prescribed tests and authorized adjustments or to describe the action taken (i.e., send to the ordnance support unit) if adjustment is not authorized to be made by using personnel.

112. Special Instructions

a. The launcher will be prepared for these tests as indicated in chapter 6.

b. The equipment needed for the tests is listed in paragraph 39.

c. The candidate will select assistants to elevate the launcher at the direction of the candidate during tests 1 and 2 and install the boresighting bracket at the direction of the candidate prior to test 4.

d. The tests will be conducted in the chronological sequence indicated in chapter 6. After completion of test 2, the gunner's quadrant used in tests 1 and 2 will be used for test 3 with the proper correction, determined in test 1, carried on the quadrant. If the correction exceeds 0.4 mil, a different quadrant will be used.

e. Adjustments which the candidate may be required to accomplish will fall within the following limits:

(1) Panoramic telescope azimuth scale, not to exceed one 100-mil graduation.

(2) Panoramic telescope slipping azimuth micrometer scale, not to exceed ten 1-mil graduations.

113. Outline of Tests

| Test number | Examiner commands | Action of candidate |
|---|---|---|
| 1 | PERFORM END-FOR-END TEST ON GUNNER'S QUADRANT. | Performs test as prescribed in paragraph 45. Calls "Error ( ) mils, quadrant serviceable (unserviceable)" and hands quadrant to examiner for verification. |
| 2 | PERFORM MICROMETER TEST ON GUNNER'S QUADRANT. | Performs test as prescribed in paragraph 46. Calls "Quadrant micrometer is (is not) in error." |
| 3 | TEST TELESCOPE MOUNT *Caution:* Do not turn cross-leveling or longitudinal-leveling knobs of the telescope mount after this test. | Performs test and makes adjustments, if necessary, as prescribed in paragraph 49. Calls "Cross- (longitudinal-) level bubble(s) within (outside) allowable limit." |
| 4 | TEST ADJUSTMENT OF PANORAMIC TELESCOPE. | Performs tests and makes adjustments as prescribed in paragraph 51. Calls "Ready" and steps clear. |

114. Penalties

a. General. These tests are not essentially speed tests. The purpose of the prescribed time limits is to insure that the candidate can perform the operation without wasted effort.

b. Test 1. No credit will be allowed if—

(1) The bubble of the gunner's quadrant does not center when verified by the examiner.

(2) The error (one-half of the value indicated when the quadrant was first reversed and the bubble centered by moving the index arm and micrometer) is announced incorrectly by the candidate.

(3) The candidate fails to declare the quadrant unserviceable if the error (necessary correction) exceeds 0.4 mil or fails to declare the quadrant serviceable if the error (necessary correction is 0.4 mil or less.

(4) The time to complete the test exceeds 3 minutes.

c. Test 2. No credit will be allowed if—

(1) The procedure is not followed correctly.

(2) The time to complete the test exceeds 2 minutes.

d. Test 3. No credit will be allowed if—

(1) The bubble of the gunner's quadrant is not centered in either direction.

(2) The candidate does not announce correctly the status of either the cross- or the longitudinal-level bubble.

(3) The time to complete the test and adjustments exceeds 6 minutes.

e. Test 4. No credit will be allowed if—

(1) The candidate fails to make any adjustment when such adjustment is indicated.

(2) The zero mark of either the azimuth scale or azimuth scale micrometer is not in coincidence with its respective index.

(3) The line of sight of the telescope does not fall on the correct slighting point on the boresighting bracket when all scales are set at 0.

(4) The time to complete the tests and adjustments exceeds 7 minutes.

115. Credit

a. The candidate will be scored on the general merit of his work in addition to the specific requirements above.

b. If the tests and adjustments are performed correctly within the prescribed time limit, maximum credit will be given as follows:

| | |
|---|---|
| Test 1 | 4 |
| Test 2 | 4 |
| Test 3 | 4 |
| Test 4 | 4 |
| Total | 16 |

## Section VIII. MATERIAL

116. Scope of Test

The candidate will be required to perform one test as outlined in paragraph 118.

117. Special Instructions

a. A complete set of lubrication equipment authorized for use of battery personnel will be made conveniently available on a tarpaulin adjacent to the launcher.

b. Every type of lubricant used on the launcher will be placed conveniently on the tarpaulin in plainly labeled containers.

118. Outline of Tests

| Examiner commands | Action of candidate |
|---|---|
| PERFORM DAILY AND QUARTERLY LUBRICATION. | Selects proper lubricating equipment and lubricant and shows how and with which lubricant each lubrication point is serviced. (Actual lubrication is not performed.) |

119. Penalties

a. This test is not essentially a speed

test. The purpose of the maximum time is to insure that the candidate can perform the operations without wasted effort.

b. No credit will be given if the time to complete the test exceeds 10 minutes.

120. Credit

a. The candidate will be scored on the general merit of his work in addition to the specific requirements above.

b. If the test is performed correctly within the prescribed time limit, maximum credit of 10 will be given.

# APPENDIX I
## REFERENCES

| | |
|---|---|
| AR 320-5 | Dictionary of United States Army Terms. |
| AR 385-62 | Firing guided Missiles and Heavy Rockets for Training, and Combat. |
| AR 611-201 | Manual of Enlisted Military Occupational Specialties. |
| AR 750-5 | Organization, Policies, and Responsibilities for Maintenance Operation. |
| ATT 6-175 | Field Artillery Missile Battalion (Battery), HONEST JOHN unf LITTLE JOHN, Rocket. |
| ATP 6-302 | Field Artillery Missile Units, HONEST JOHN and LITTLE JOHN Rocket. |
| DA Pam 108-1 | Index of Army Motion Pictures, Filmstrips, Slides, and Phono-Recordings. |
| DA Pam 310-series | Index of Military Publications. |
| FM 1-100 | Army Aviation. |
| FM 5-15 | Field Fortifications. |
| FM 5-20 | Camouflage, Basic Principles and Field Camouflage. |
| FM 5-25 | Explosives and Demolitions. |
| FM 6-20-2 | Field Artillery Techniques. |
| FM 6-40 | Field Artillery Cannon Gunnery. |
| FM 6-61 | Field Artillery Missile Battalion, HONEST JOHN Rocket, Self-Propelled. |
| FM 6-125 | Qualification Tests for Specialists, Field Artillery. |
| FM 6-140 | The Field Artillery Battery. |
| FM 21-5 | Military Training. |
| FM 21-30 | Military Symbols. |
| FM 21-40 | Small Unit Procedures in Nuclear, Biological, and Chemical Warfare. |
| FM 21-60 | Visual Signals. |
| FM 22-5 | Drill and Ceremonies. |
| FM 31-70 | Basic Cold Weather Manual. |
| LO 9-1055-204-12 | Launcher, 762-mm Rocket, XM33. |
| LO 9-1055-205-10 | Launcher, Truck Mounted, 762-mm, Rocket M386. |
| TB 9-100-212-20 | Launcher, 762-mm Rocket, Truck-Mounted, M289, and M386: Inspection Procedures and Straightness Standards for Launching Beam of Materiel in hands of troops. |
| TM 3-220 | Chemical, Biological, and Radiological (CBR) Decontamination. |
| TM 5-200 | Camouflage Nets and Net Sets. |
| TM 9-238 | Deep Water Fording of Ordnance Materiel. |
| TM 9-247 | Materials Used for Cleaning, Preserving, Abrading and Cementing Ordnance Materiel; and Related Materials, Including Chemicals. |
| TM 9-575 | Auxiliary Sighting and Fire Control Equipment. |
| TM 9-1055-203-15 | Operation and Maintenance: Truck-Mounted 762-mm Rocket Heating and Tiedown Unit M78A1. |
| TM 9-1055-205-10 | Operator's Manual: Truck Mounted 762-mm Rocket Launcher, M386. |

| | |
|---|---|
| TM 9-1055-205-20 | Organizational Maintenance Manual: Truck-Mounted, 762-mm Rocket Launcher M386. |
| TM 9-1055-208-12 | Operator and Organizational Maintenance Manual: Trailer-Mounted 762-mm Rocket Handling Units M405 and M405A1. |
| (S) TM 9-1100-200-12 | Operator and Organizational Maintenance Manual (Prelaunch Procedures): HONEST JOHN Atomic Warhead Section XM27, XM47, and XM48 and Training Warhead Section XM72 (U). |
| TM 9-1340-202-12 | Operator and Organizational Maintenance Manual: 762-mm Rockets M31-series and XM50 (762-mm Rocket System). |
| TM 9-1527 | Ordnance Maintenance: Gunner's Quadrants M1 and M1918 and Machinegun Clinometer M1917. |
| TM 9-1900 | Ammunition, General. |
| TM 9-1946 | Demolition Materials. |
| TM 9-2810 | Tactical Motor Vehicles: Preventive Maintenance, Supply, Inspection, and Training Procedures. |
| TM 9-6103 | Ordnance Maintenance: Telescope Mounts M3A1, M18A1, M21A1, M25, M30, M44, M44A1, M69, and M76. |
| TM 9-6147 | Ordnance Maintenance: Panoramic Telescopes: M12A7C, M12A7D, M12A7F, M12A7C, M12A7H, and M12A7K (M12A7E4). |
| TM 9-8022 | Operator and Organizational Maintenance: 2-1/2-ton, 6 x 6, Cargo Trucks M34, M35 and M36C. |
| TM 9-8028 | Operator and Organizational Maintenance Manual: 5-ton, 6 x 6, Cargo Truck M41 and M54; Chassis Truck; M40, M61, M139, and M193C; Dump Truck M51; Tractor Truck M52; Medium Wrecker Truck M62; and Tractor Wrecker Truck M246. |
| TM 9-8030 | Operation and Organizational Maintenance: 3/4-ton, 4 x 4, Cargo Truck M37 and M37B1. |
| TM 10-500 | Air Drop of Supplies and Equipment: General. |
| TM 11-6660-203-10 | Operator's Manual: Wind Measuring Sets AN/MMQ-1, AN/MMQ-1A, AN/MMQ-1B, and AN/PMQ-6. |
| TM 11-6660-203-20P | Organizational Maintenance Repair Parts and Special Tool List: Wind Measuring Sets MMQ-1, AN/MMQ-1A, AN/MMQ-1B, AN/PMQ-6, and AN/PMQ-6A. |
| TM 21-300 | Driver Selection and Training (Wheeled Vehicles). |
| TM 21-301 | Driver Selection, Training, and Supervision, Tracked Vehicles. |
| TM 21-305 | Manual for Wheeled Vehicle Driver. |
| TM 38-750 | The Army Equipment Record System and Procedures. |
| TOE 6-175E | Field Artillery Battalion, HONEST JOHN Armored Division or Infantry Division or Infantry Division (mechanized) |
| TOE 6-525D | Field Artillery Missile Battalion, HONEST JOHN Rocket, Self-Propelled. |

# APPENDIX II
# ASSEMBLY AND TRANSPORT SECTION

## Section I. GENERAL

1. Purpose and Scope

This appendix is a guide to assist commanders of 762-mm rocket units in developing the assembly and transport (a&T) sections into efficient, smooth working teams that will operate effectively under combat conditions. This appendix prescribes general and individual duties of section personnel and procedures for handling, transporting, assembling, and testing rockets.

2. Section Drill

Section drill is not prescribed for the assembly and transport section; however, commanders may appropriately adapt the provisions of chapter 3 to the training of the assembly and transport section as desired.

3. References

Publications pertaining to related matters not discussed in detail in this appendix are listed in appendix I.

## Section II. ORGANIZATION

4. Composition of the Assembly and Transport Section

a. The assembly and transport section consists of section personnel and the necessary vehicles and handling equipment required to assembly, test, store, and transport rockets and warheads. The section is capable of testing and assembling two rockets simultaneously for limited periods.

b. The assembly section consists of 14 members. A minimum of six are required for assembly, using the wrecker, and a minimum of nine are required, using the M405 handling unit. The personnel in the assembly and transport section are as follows:

(1) Ammunition officer.
(2) Chief of section.
(3) Two senior assembly specialists.
(4) Two assembly specialists.
(5) Eight launcher crewmen.

c. Equipment authorized the assembly and transport section is listed in TOE's and SNL's appropriate to this type of weapon and unit.

5. General Duties of Personnel

a. Ammunition officer. The ammunition officer commands the assembly and transport section. As the section commander he is responsible for the tactical employment of the section; assembly, and delivery of checked out rockets to the firing sections; storage and security of rocket motors and warheads, and the overall performance of the section.

b. Chief of Section. The chief of section is the noncommissioned officer in command of the section and, as such, is responsible to the section commander for—

(1) The training and efficiency of section personnel.
(2) The performance of duties listed in this appendix and those prescribed for inspection and maintenance of section equipment, including vehicles.
(3) The transportation and handling of rockets from the time of issue at the special ammunition supply point (SASP) to the time of delivery to the launcher section.
(4) Observance of safety precautions.
(5) The preparation of field fortifications for portection of equipment, rockets, and personnel.
(6) Camouflage discipline; local security; and radiological, biological, and chemical security discipline.
(7) The maintenance of prescribed checkout and testing records.

c. Senior Assembly Specialists. The senior assembly specialist is responsible for the handling, testing, conditioning, checkout, and maintenance of rockets and warheads for delivery to the firing sections.

d. Assembly Specialists. The assembly specialists assist the senior assembly specialist in the performance of his duties and perform duties listed in this appendix and such other duties as prescribed by the chief of section.

e. Launcher Crewmen. All launcher crewmen are drivers. Four launcher crewmen drive the heating and tiedown units, two crewmen drive and operate the wreckers, and two crewmen are light truck drivers. Additional duties are assigned by the section chief.

## Section III. ROCKET ASSEMBLY

### 6. General

Rockets are transported from the Special ammunition supply point (SASP) to the unit rocket assembly position by the assembly and transport section in M78 heating and tiedown units. Each unit accommodates one complete rocket. The rocket motor and warhead may be uncrated at the SASP and transported, with electric blankets installed, on the heating and tiedown unit. Assembly operations consist of uncrating the rocket components (when required), assembling the rockets on handling units, installing electric blankets, performing electrical checks on the rocket and warhead, and delivering assembled rockets to the firing section at the loading position.

### 7. Assembly

a. Duties of individuals in assembling the rocket, using the wrecker, are shown in table X. Figure 11 shows the positions of vehicles for rocket assembly with the wrecker.

b. The M405 handling unit may be used as an alternate method in assembling the rocket. Duties of individuals in assembling the rocket, using the M405 handling unit, are shown in table XI.

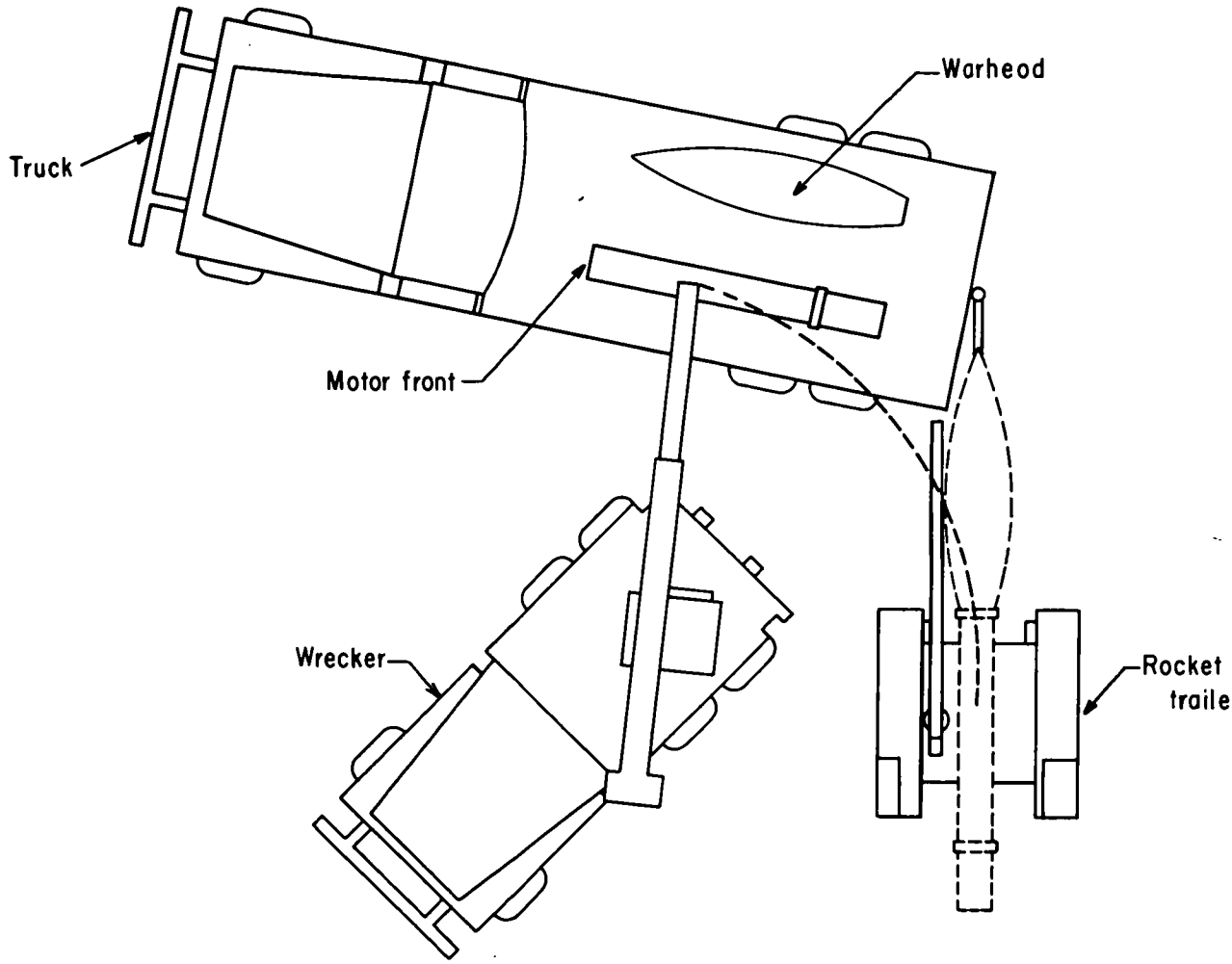


Figure 11. Positions of vehicles for rocket assembly with the wrecker.

## Section IV. ELECTRICAL CHECKOUT

### 8. Electrical Checks

Electrical checks as prescribed in TM-9-1340-202-12 are performed in the rocket assembly position before the warhead section is mated to the motor assembly.

### 9. Electrical Test Equipment

The M17 multimeter is the only circuit tester authorized for use in checkout of the 762-mm rocket motor electrical system. This tester contains a specially designed ohmmeter which used a 1-1/2-volt battery as its power source. Use of this low-voltage source in the tester eliminates the possibility of accidentally activating the igniter.

### 10. Rocket Repair

Minor rocket repairs authorized in TM 9-1340-202-12 are made by the assembly and

transport sections. Major repairs to the rocket and repairs to explosive components, excluding replacement of components, are made by ordnance personnel.

11. Rocket Assembly and Test Checklist

a. A rocket assembly and test checklist should be prepared by each unit in order to provide continuity of operation. A well prepared checklist will assist commanders in the efficient functioning of the section and should contain the following basic items.

(1) Rocket component information required by the FDC.

(2) Essential procedures required in the assembly operations, for example:

(a) Rocket component inventory upon receipt of the weapon.

(b) Critical steps in assembly such as the torquing specifications for warhead mating bolts.

(c) Steps in electrical checkout.

b. The amount of detail required in a checklist will be determined by the commander. However, as a minimum, the checklist should contain those items required by the FDC to be used for fire mission computations, and a list of steps and procedures to be used by the firing section for those operations requiring specific tolerances and specifications.

c. The checklist should accompany the rocket from the time it is assembled and checked out until the time it is fired.

# APPENDIX III
# PROCEDURES AND DUTIES OF PERSONNEL
# M33 LAUNCHER

## Section I. GENERAL

1. General

When authorized by the threater of operations commander (WABTOC) the M33 launcher may be issued to an HONEST JOHN battalion for special operations.

2. Purpose and Scope

This appendix provides guidance for HONEST JOHN units equipped with M33 launchers. Included are only those equipment requirements, procedures, and duties of personnel peculiar to the M33 launcher section for normal operation, aerial delivery, and helicopter movement. When applicable, appropriate reference is made to the equipment requirements, procedures, and duties of personnel associated with the M386 launcher as discussed in the manual.

## Section II. ROCKET ASSEMBLY

3. General

Rocket assembly may be performed by the assembly and transport section or by the firing section. Paragraphs 4 through 7 below describe the detailed duties of firing section personnel when rocket assembly is performed by the firing section. The firing section may be required to perform assembly operations in the following situations:

a. On delivery of an unassembled rocket by helicopter to an area at or near the firing position.

b. On delivery of an unassembled rocket to a position within an airhead by cargo aircraft (air landed).

c. Following parachute delivery of an unassembled rocket.

4. Assembly on the Transport Cart (Helicopter Delivery)

a. The rocket is assembled on a transport cart when the warhead is helicopter delivered on a transport cart and thr rocket morot is helicopter delivered on a skid that is unsuitable for use in rocket assembly.

b. To aid the helicopter pilot in orienting the skid-mounted rockets in the general direction of fire, a strip of engineer tape may be used to materialize the direction of fire on the ground. Each helicopter load is directed into position by the chief of section. Hand signals for guiding the helicopters must be carefully worked out between the chief of section and the helicopter pilot.

c. The duties of individual firing section personnel in assembling the rocket on the transport cart are shown in table XII.

5. Assembly on the Rocket Skid (Helicopter Delivery)

a. The rocket is assembled on the rocket skid by the firing section when delivery is made as in paragraph 3 above, provided the skid is suitable for the assembly operations.

b. The duties of individual firing section personnel in assembling the rocket on the rocket skid are shown in table XIII.

6. Assembly on the Transport Cart (Air-Landed Delivery)

a. The rocket is assembled on the transport cart by the firing section when both the warhead and rocket are delivered on transport carts in an air-landed operation.

b. The duties of individual firing section personnel in assembling the rocket

on the transport cart in an air-landed operation are shown in table XIV.

7. Assembly on the Transport Cart (Parachute Delivery)

a. The rocket is assembled on the transport cart by the firing section when the rocket motor, warhead, and transport cart are delivered on separate pallets by parachute.

b. The duties of individual firing section personnel in assembling the rocket on the transport cart after delivery by parachute are shown in table XV.

## Section III. LOADING THE LAUNCHER

8. Loading Operations

Loading operations are performed by using a tripod and hoist or the M405 handling unit. The operation is begun with an assembled round and includes —

a. Installing the fins (when required).

b. Transferring the rocket from the transport cart, skid, or handling unit to the launcher.

c. Connecting the heating blankets to an electrical power source when heating is required.

9. Responsibilities for Loading

Loading operations are the responsibility of the firing section. The loading operation may be performed at a loading position or as a part of preparation for action at the firing position. The firing section commander is responsible for selecting the loading position for the section and for reporting the location to the battery commander. The launcher must be cross-leveled for loading and firing. The chief of section normally directs the loading operation.

10. Loading With the Tripod

a. To load the launcher, select a level position for the tripod. If the M405 handling unit is being used as a trailer only, the hydraulic column must be lowered prior to the loading operation. Erect the tripod directly over the skid, transport cart, or handling unit containing the assembled rocket; lift the rocket; remove the transport device; position the launcher beneath the tripod; and lower the rocket onto the launcher.

b. The duties of individual crew members in loading the launcher with the tripod are shown in table XVI.

11. Loading With the M405 Handling Unit

a. Select the most level loading position available. If the position is not completely level, the handling unit should be positioned on the uphill side of the launcher. Position the handling unit parallel to the left side of the launcher at an interval of 7 to 15 inches. The handling unit must be headed in the same direction as the launcher. Relative positions of equipment for loading with the M405 handling unit are shown in figure 12.

b. The duties of individual crew members in loading with the M405 handling unit are shown in table II.

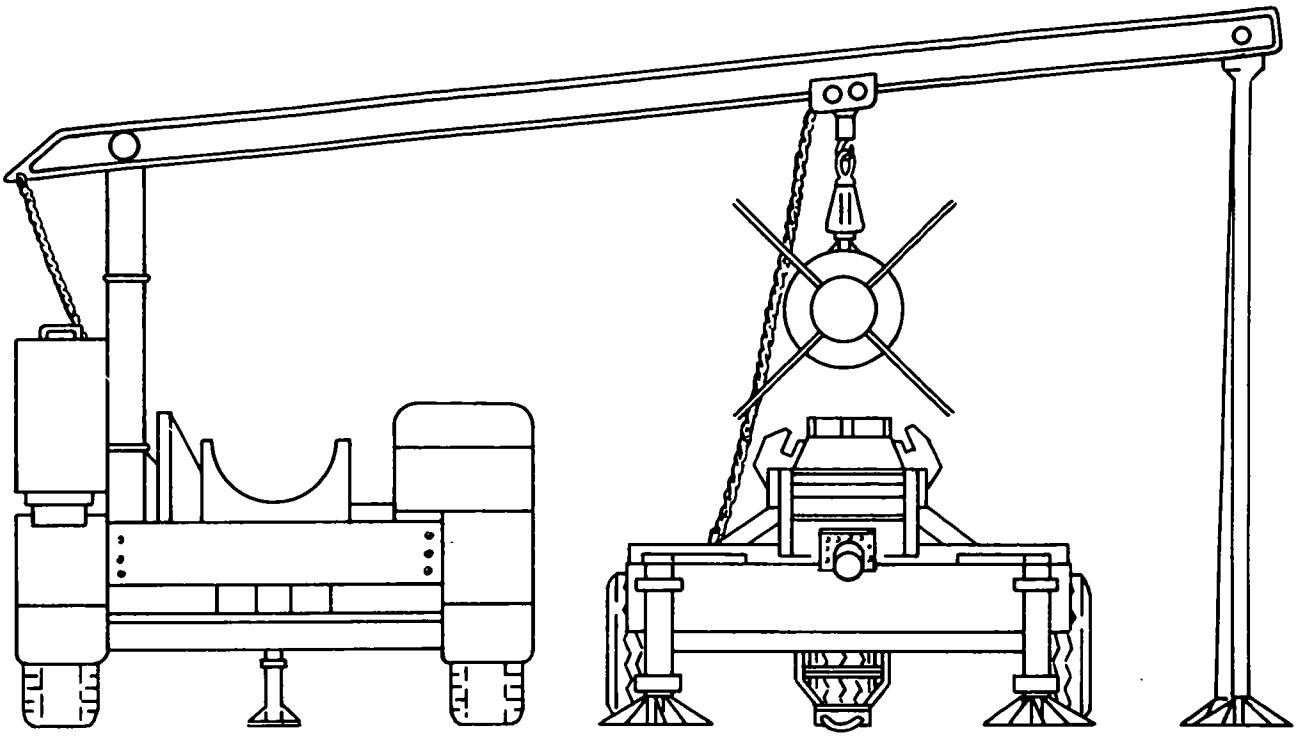

Figure 12. Position of equipment for loading with the M405 handling unit.

## Section IV. DUTIES IN PREPARATION FOR ACTION, FIRING, AND MARCH ORDER

### 12. Prepare for Action

The general duties in preparing the launcher for action are the same as those outlined in chapter 4. Specific duties are outlined in table XVII.

### 13. Firing

The general duties in firing are the same as those outlined in chapter 4. Specific duties are outlined in table XVIII.

### 14. March Order

The general duties in march order are the same as those outlined in chapter 4. Specific duties are outlined in table XIX.

## Section V. BORESIGHTING AND BASIC PERIODIC TESTS

### 15. Boresighting

The distant aiming point method is normally used in boresighting the launcher in daylight when weather permits. (The procedure for boresighting at night or during inclement weather is given in paragraph 42 of the manual). The procedure is as follows:

a. Install the front and rear boresight brackets to the rear of the points where the front and rear shoes of the rocket leave the launcher rail.

b. Cross-level the launcher beam and lay the launcher beam to 0 mils elevation, using the gunner's quadrant.

c. Center the cross-level and longitudinal-level bubbles on the sight unit.

d. Check the cross-level indicator for alinement of the indexes. If the indexes are not in alinement, perform the telescope mount cross-level test (par. 16b(5)).

e. Check the elevation scale and micrometer for zero reading. If the reading is other than 0 perform the telescope mount elevation test (par. 16b(6)).

Note. The elevation scale is used as a check when laying for elevation. Laying for elevation is performed by using a gunner's quadrant placed on the pads located on the left (right) rear side of the launcher beam or on the logitudinal-leveling quadrant pads of the sight unit.

f. Traverse and elevate the launcher beam until the vertical hairline in the front boresight bracket and the gunner's line of sight through the peephole of the rear boresight bracket are alined on an aiming point at least 2,000 meters distant.

g. Check the cross-level alinement of the telescope hairlines. To place the hairlines in a horizontal plane, loosen the telescope holder wing screw and rotate the telescope until the reference mark on the telescope and the mark on the holder coincide. Tighten the wing screw securely.

h. Aline the telescope in elevation by loosening the wingnut in the side of the telescope holder mounting bracket and rotating the telescope holder until the reference marks on the bracket and the holder coincide. Tighten the wingnut securely.

i. Look through the telescope. If the vertical hairline does not coincide with the aiming point, turn the azimuth micrometer knob until coincidence is obtained (remove boresight brackets, if necessary, in order to see the aiming point).

j. Zero the azimuth scales on the elbow telescope.

k. Replace the front boresight (if removed in i above). If the vertical reticle in the telescope does not coincide with the vertical hairline on the boresight bracket, turn the azimuth knob on the telescope to obtain coincidence. Record the deflection for use when boresighting at night or in inclement weather. If the recorded deflection differs from 0 by more than 2 mils, the curvature of the launcher beam should be checked.

16. Basic Periodic Tests

Inspections and tests for the gunner's quadrant are given in paragraphs 44 through 48, of this manual. Tests for the telescope and mounts are as follows:

a. Test of Elbow Telescope and Mount.

(1) The purpose of this test is to—

(a) Determine whether the azimuth mechanism of the telescope mount actually transmits the motion of the launcher beam to the sight mount so that no deviation in deflection is introduced by elevating the launcher beam.

(b) Check the adjustment and mounting of the telescope mount, the settings of the cross-level and longitudinal-level vials, and the alinement of the telescope socket.

(c) Reflect total errors of the entire mechanism.

(2) Because compensating errors of the various parts of the mount may result in the weapon testing out properly, the tests specified in (3) (b) and (c) below should always be performed, regardless of the results of this test. This provides for dividing the total errors found into errors in specific parts.

(3) The general test is performed as follows:

(a) Boresight the weapon (par. 15 above).

(b) Cross-level the launcher and check with a previously tested gunner's quadrant.

(c) Level the telescope mount bubbles and refer to a clearly defined distant aiming point.

(d) Elevate the launcher beam to maximum elevation, in 100-mil steps. At each step, level the mount bubbles and note the deviation of the optical axis of sight from the aiming point. Deflection deviation is measured on the azimuth micrometer scale; the allowable deviation is one-half mil.

b. Basic Tests for the Telescope Mount.

(1) Cross-level test. Center the cross-level bubble and turn the longitudinal-level knob throughout its limits of motion. The cross-level bubble should remain centered within one-half vial graduation.

(2) Pivot alinement test. Center the cross-level bubble and place the line of sight of the elbow telescope on a sharply defined aiming point. (Plumbline may be used.) Elevate the launcher beam to maximum elevation while keeping the telescope mount level longitudinally.

Note. Do not readjust the cross-level bubble after the initial setting. Check at low, medium, and high elevations of the launcher beam. The line of sight of the elbow telescope should not deviate more than one-half mil, and the cross-level bubble should remain centered within one-half vial graduation.

(3) Vertical alinement test of telescope mount. Set the launcher beam at 100 mils elevation and level the telescope mount bubbles. Operate the cross-leveling knob throughout its limits of motion. The longitudinal-level bubble should remain centered within one-half vial graduation.

(4) Telescope holder socket alinement test. With the azimuth scale and the azimuth micrometer scale set at 0, traverse the launcher until the vertical reticle of the telescope is on a plumbline (or aiming point), with both the cross-level and longitudinal-level bubbles centered. Sight through the telescope and rotate the telescope holder throughout its vertical limits of motion. The vertical reticle should remain on the plumbline (aiming point) within one-half mil. Set the azimuth scale at 1,600 mils and the azimuth micrometer scale at 0 mils. Sight on a plumbline (aiming point) with both the cross-level and longitudinal-level bubbles centered. Rotate the telescope holder throughout its vertical limits of motion. The vertical reticle should stay on the plumbline (aiming point) within one-half mil.

(5) Telescope mount cross-level test. Cross-level the launcher beam. Place the gunner's quadrant, set at zero mils, on the cross-leveling quadrant pads (the gunner's quadrant should be parallel to the cross-level vial) and turn the cross-level knob to center the bubble of the gunner's quadrant. If the bubble in the cross-level vial is not centered within one-half vial graduation, the cross-level vial or sight mount must be adjusted or repaired by ordnance personnel. If the cross-level vial bubble is centered within the above tolerance and the index mark on the cross-level indicator is not opposite the index mark on the cross-level worm housing, adjust the cross-level indicator as follows:

(a) Loosen the three screws in the cross-level knob.

(b) Turn the cross-level knob until the index marks are alined. Check to see that the bubble of the gunner's quadrant is not disturbed.)

(c) Tighten the three screws to clamp the cross-level indicator.

(6) Telescope mount elevation test. Lay the launcher beam to 0 mils elevation, using the gunner's quadrant. Place the gunner's quadrant, set at 0 mils, on the longitudinal-leveling quadrant pads (the gunner's quadrant should be parallel to the longitudinal-level vial) and turn the elevation knob to center the bubble of the gunner's quadrant. If the bubble in the longitudinal-level vial is not centered within one-half vial graduation, the longitudinal-level vial or sight mount must be adjusted by ordnance personnel. If the longitudinal-level vial bubble is centered within the above tolerance and the indexes of the elevation and elevation micrometer scales are not opposite the zero mark on the scales, adjust the elevation scale and elevation micrometer scale as follows:

(a) To adjust the elevation scale, loosen the two screws which secure the scale and turn the scale until the zero mark on the scale coincides with the index arrow on the mount assembly. Tighten the screws to secure the scale.

(b) To adjust the elevation micrometer, loosen the three screws in the elevation knob and rotate the micrometer scale until the zero mark coincides with the index arrow on the mount. Tighten the screws to secure the micrometer.

c. Tests for the Elbow Telescope.

(1) Basic test for the elbow telescope. Zero the sight unit. Traverse the launcher beam as necessary to place the elbow telescope reticle on an aiming point. Rotate the telescope holder through a complete circle (6,400 mils). The telescope reticle should return to the aiming point within one mil. Rotate the telescope holder through a complete circle in the opposite direction. The telescope reticle should again return to the aiming point within one-half mil.

(2) Elbow telescope parallax test. Sight through the telescope at any convenient target at least 100 meters from the telescope. Move the eye about one-quarter inch from side to side and up and down at the normal eye distance from the eyepiece while continuing to look through the telescope. If the reticle appears to move with respect to the reference point on the target, parallax is present and the telescope is inaccurate. The telescope will be turned in to the ordnance support unit.

d. Procedure When Tests Exceed Tolerances. If the telescope mount or elbow telescope exceeds the tolerances prescribed for any of the tests outlined, the launcher and/or elbow telescope should be sent to ordnance for adjustment or repair.

## Section VI. PREPARATION OF EQUIPMENT FOR SPECIAL OPERATIONS

### 17. General

This section provides guidance for HONEST JOHN units concerning unit responsibilities, equipment requirements, and duties of personnel in preparing firing section equipment for aerial delivery or helicopter movement.

### 18. Responsibilities

a. Air-Landed Operation. The HONEST JOHN unit commander is normally responsible for delivering equipment to the transport aircraft. Loading, positioning, lashing, and tiedown of equipment are performed under the direction of the aircraft commander.

b. Parachute Delivery Operations. Rigging of equipment for parachute delivery is the responsibility of specially trained parachute maintenance personnel. Derigging is performed by the launcher crewmen.

c. Helicopter Transport. Rigging of equipment for external helicopter transport is performed by the launcher crewman, supervised by helicopter unit personnel when the situation permits.

### 19. Parachute Delivery Operations

a. Rigging of loads for parachute delivery is described in TM 10-500. The four loads listed in (1) through (4) below include all equipment required by one firing section to execute a single fire mission.

(1) Load 1 (rigged on 22-foot platform):
- M33 launcher
- Small tripod with chain hoist
- Ladder
- Aiming posts
- Box containing:
  - Firing panel box
  - Firing line and reel
  - Multimeter
  - Power elevating tool
  - Rocket positioning jack
  - Staking equipment
  - Two-ton come along

Three sets of rocket clamps and straps
Tool set, rocket assembly
Tool set, launcher
Aiming circle tripod(aiming circle is carried by the section chief)

(2) Load 2:
Rocket motor
Warhead (on crate skid)
Large tripod with chain hoist
Fin box (containing fins)
Warhead handling sling
Rocket handling beam
Insulating blanket (normally installed)

(3) Load 3:
Transport cart
Windset
Generator with jumper cables for starting

(4) Load 4:
Prime mover
Following equipment when subsequent helicopter movement is anticipated:
Two delivery baskets
One rocket skid
One set of standard slings necessary for helicopter lift

b. Derigging performed by the launcher crewmen in the drop zone consists of releasing the tiedowns on the equipment and removing the equipment from the platforms.

20. Rigging of Equipment for External Helicopter Transport

a. General. Standard-type suspension slings and clevises necessary to lift all loads indicated in b through g below will be requisitioned by the using unit and provided to the firing section. General use of these slings is described in FM 1-100. Details of rigging each load of HONEST JOHN firing section equipment is described in b through g below.

b. M33 Launcher.

(1) Preparation of load.
(a) Place the launcher in the travel position with the tow bar up.
(b) Lash plywood strips on top of the launcher rail to prevent damage by a falling clevis.

(2) Rigging of load.
(a) Loop two 16-foot slings around the main frame cross-member at the rear end of the launcher. Join the slings at the apex with a large clevis.
(b) Loop two 12-foot slings around the main frame cross-member at the forward end of the launcher. Extend at the apex with a 2-foot sling. Join the ends of the 2-foot sling with a large clevis.
(c) Tie the two clevises together tightly with light string or masking tape.

Note. When the load is picked up, the light string (tape) will break, allowing the clevises to separate on the cargo hook. This will cause the load to orient itself on the same axis of the helicopter when hovering. The helicopter can then be maneuvered to orient the rocket in the direction of fire. If wind conditions are adverse, the clevises can be reversed on the cargo hook.

(d) Tie a 2-foot bridle of heavy cord between the two clevises.
Caution: Plywood strips must be secured tightly to the launcher rail, because they are subjected to severe air pressure during flight.

c. Transport Cart With Warhead and Small Tripod.

(1) Preparation of load.
(a) Fasten all equipment securely to the cart. Use additional straps if necessary.
(b) Strap the tongue drawbar of the cart to the cart in a manner to prevent the tongue from dragging on the ground.
(c) Pad the top of the warhead for protection against a falling clevis.

(2) Rigging of load.
(a) Loop an 8-foot sling around the frame of the cart just above each wheel.
(b) Pad all sharp edges of the frame under the slings.
(c) Secure the free ends of the slings to a large clevis. Attach another large clevis to this one with a bolt.

(3) Cautions.

(a) The slings should be taped to the warhead to prevent the slings from fouling on the equipment after hookup.

(b) The clevis should be released to the side of the load to prevent its falling on the warhead.

d. Rocket Motor on Skid.

(1) Preparation of load.

(a) Lash the rocket motor securely to the cradle. Use additional straps if necessary.

(b) Pad the top of the rocket motor to prevent damage from a falling clevis.

(2) Rigging.

(a) Loop two 8-foot suspension slings around the cradle braces at the rear (nozzle) end of the rocket.

(b) Loop two 7-foot slings around the cradle braces at the forward end of the rocket.

(c) Secure all slings to the cradle frame with additional tiedown webs to prevent slipping.

(d) Secure the free ends of the four slings to a large clevis. Attach another large clevis to this one with a bolt.

Caution: The clevis should be released to the side of the load to prevent its falling on the rocket.

e. Two Cargo Baskets. (The baskets contain the section equipment, to include the windset, large tripod, generator, and rocket fins.)

(1) Preparation of load.

(a) Lash all equipment securely into the two baskets.

(b) Stack the baskets one on top of the other and fasten together with the clamps provided.

(2) Rigging.

(a) Attach one 8-foot sling to each of the top corner suspension points on the bottom basket.

(b) Secure the free ends of the slings to a large clevis. Attach another large clevis to this one to form a double clevis.

Caution: The load should be inspected to insure that any fragile equipment is padded to prevent damage from a falling clevis.

f. Truck, 1/4-Ton, 4 x 4.

(1) Preparation of load.

(a) Remove the shackles from the lifting brackets.

(b) Lower the windshield and retract the rearview mirror.

(c) Secure a plywood cover over the windshield.

(d) Place the gearshift in the neutral position and set the emergency brake.

(e) Remove the right front and rear seats.

(2) Rigging.

(a) Secure 11-foot suspension slings to each rear lifting bracket by running the bracket bolt through the loop of the webbing.

(b) Secure 9-foot suspension slings to each front lifting bracket in the same manner.

(c) Secure all bracket bolts with cotter pins.

(d) Attach all four slings to a large clevis. Attach another large clevis to this one to form a double clevis.

g. Complete Assembled Rocket. (This method of delivery eliminates loads described in c and d above.)

(1) Preparation of load.

(a) Assemble the rocket without fins or igniter.

(b) Install the insulating blanket.

(c) Place the rocket on the rocket motor skid.

(d) Lash the warhead skid under the warhead. Use 2 inches of padding between the rocket and the rear end of the skid to prevent the lip of the skid extension from puncturing the warhead skin.

(e) Remove the integral lifting brackets from the skid.

(2) Rigging.

(a) Attach one 8-foot sling to each of the four lifting points on the rocket skid.

(b) Extend the two forward slings with 4-foot slings.
(c) Extend the two rear slings with 7-foot slings.
(d) Place the warhead sling over the warhead and tape it in place. Extend it with a 15-foot tiedown strap. (This strap does not carry weight but acts as a damper to prevent pitching during flight.)
(e) Attach a large clevis to the loose ends of the 4-foot slings. Raise the clevis to maximum height and tie the 15-foot strap to the clevis.
(f) Attach a second large clevis to the loose ends of the 7-foot slings.
(g) Tie the two clevises together tightly with light string or masking tape.
(h) Tie a 2-foot bridle of heavy cord between the two clevises.

(1) Cautions.
(a) The load should be test-lifted with a wrecker before flight to insure that the warhead is level with, or slightly higher than, the motor.
(b) The clevis should be released to the side of the load to prevent its falling on the rocket.

21. Helicopter Operations

a. Each firing section should conduct individual training in the duties of signal men and hookup men. These duties, including the use of hand signals, are described in detail in FM 1-100.

b. Primary safety precautions to be stressed during training are as follows:

(1) Signal and hookup personnel must wear the following protective equipment:
(a) Steel helmet.
(b) Driving goggles or other eye protective device.
(c) Dust inhalators and earplugs.
(d) Heavy gloves (Hookup personnel).

(2) All ground crew members should be instructed to move to the pilot's right, away from the helicopter, in case of any emergency.

(3) The charge of static electricity which is nearly always present on the cargo hook must be discharged before touching the hook with the hand. The methods of discharging static electricity are described in FM 1-100.

Table I. Loading with the Wrecker

| Sequence | Chief of section | Gunner | No. 1 | No. 2 (driver) | No. 3 | No. 4 | No. 5 | No. 6 | Senior assembly specialist | Assembly specialists |
|---|---|---|---|---|---|---|---|---|---|---|
| 1 | Directs vehicles into proper position for loading. | Assists chief of section. | | Positions launcher as directed. | | | | | Supervises assembly specialists. | |
| 2 | | Places left rear launcher platform assembly in extended position. | Lowers right front wrecker outrigger. | Lowers left front wrecker outrigger. | Unlocks traveling clamps on rocket. | Unlocks traveling clamps on rocket. | Lowers right rear wrecker outrigger. | Lowers left rear wrecket outrigger. | Removes cab top and lowers windshield and mirrors. | Install fins on rocket (when necessary). |
| 3 | | | Releases right stabilizing arm on wrecker beam. | Releases left stabilizing arm on wrecker beam. | Disconnects electric blankets. | Disconnects electric blankets. | Assisted by No. 6, installs handling beam on rocket (when directed). Centers handling rear balancing block. | Assists No. 5 in installing handling beam on rocket (when required). Attaches guide ropes to handling beam. | | Place right rear launcher platform assembly in extended position. |
| 4 | Directs operations of the wrecker operator when handling the rocket. | Positions drawbar on launcher beams. | Handles right front guide rope on handling beams. | Handles left front guide rope on handling beam. | Handles right rear rear guide rope on handling beam. | Handles left rear guide rope on handling beam. | Attaches hook to handling beam. | Positions balancing block on handling beam. | | Remove ladder assembly from right front fender and positions under rear of launcher beam. |
| 5 | | Guides rear shoes of rocket on the launcher beam. | | | | | | | | Guide front shoes into slot on launcher rail. |
| 6 | | Jacks rocket into position. Secures the drawbar to the rear shoes of the rocket. | | | | | Removes handling beam from rocket and stores it on wrecker assisted by No. 6. | Assists No. 5 in removing and storing handling beam. Removes guide ropes from handling beam. | | |
| 7 | | Positions left rear traveling clamp in traveling position and installs strap assembly. | Raises right front wrecker outrigger. | Raises left front wrecker outrigger. | | Positions left front and center traveling clamps and installs strap assemblies. | Raises left rear wrecker outrigger. | | | Position right front center and rear traveling clamp and install strap assemblies. |
| 8 | Connects electric blankets when required. | Replaces left rear launcher platform assembly in traveling position. | Secures right stabilizing arm on wrecker beam. | Secures left stabilizing zirn on wrecker beam. | | | | | | Replace right rear launcher platform assembly in traveling position; replace ladder. |

Table II. Loading with M405 Handling Unit

| Sequence | Chief of section | Gunner | No. 1 | No. 2 (driver) | No. 3 | No. 4 | No. 5 | No. 6 | Senior assembly specialist | Assembly specialist | Assembly specialist | Assembly section crewman |
|---|---|---|---|---|---|---|---|---|---|---|---|---|
| 1 | Directs vehicle into proper position for loading. | | | | | | Secures handling unit to launcher when required. | | | | | |
| 2 | Supervises loading operation. | Directs loading operation. | Places jack assembly on handling unit in vertical position and lowers to ground. Continues to operate jack to enable uncoupling of the handling unit from the prime mover (if required). | Places left rear launcher platform assembly in the extended position. | Assisted by No. 4, removes A-frame from handling unit and installs A-frame on launcher beam. | Assists No. 3 in removing and installing A-frame. | Sets left parking brake on handling unit. | Places left platform assembly on handling unit in loading position. | Removes cab top and lowers windshield and mirrors. | Sets right parking brake on handling unit. | Places left rear launcher platform assembly in extended position. | Disengages hook on chain hoist from lug on hydraulic lift assembly. |
| 3 | | | | Attaches guide ropes to end of beam assembly on handling unit. | | | Installs handling beam on rocket, assisted by No. 6. Centers handling beam balancing. | Assists No. 5 in installing handling beam on rocket. Attaches guide ropes to handling beam. | Places snubber on handling unit in loading position. | Releases rear strap assembly on rocket and disconnects heating blanket (rear). | Releases front and center strap assemblies on handling unit; disconnects heating blanket (front and center). | |
| 4 | | | | | | | | | | | Installs fins on rocket. | Operates hydraulic pump to extend lift to maximum height. |
| 5 | | | Handles left guide rope on beam assembly. | | | | Handles right guide rope on beam assembly. | Attaches hoist hook to handling beam and positions balancing block. | | | Places ladder assembly under rear of launcher beam. | Assisted by Nos. 1 and 5, swings beam assembly to loading position; releases hydraulic pressure to lower beam to A-frame. |
| 6 | | Positions drawbar on launcher beam. | Handles right front guide rope on handling beam. | Handles left front guide rope on handling beam. | Operates hoist to raise rocket to clear generator. | Handles left rear guide rope on handling beam. | Handles right rear guide rope on handling beam. | | | | | |
| 7 | | | | | | | | | | | | Operates beam traverse drive assembly to traverse rocket, assisted by launcher crewman as directed by chief of section. |
| 8 | | Guides rear rocket shoes into position. Jacks rocket into position. Secures drawbar to rear shoes of rocket. | | | Operates hoist to lower rocket onto launcher. | | | | | | Guides front rocket shoes into slot in launcher rail. | |
| 9 | | Positions left rear traveling clamp and installs strap assembly. | | | | Positions left front and center traveling clamps and installs strap assemblies. | | Positions left front and center traveling clamps and installs strap assemblies. | | Positions right front, center and rear traveling clamps and installs strap assemblies. | Positions right front, center and rear traveling clamps and installs strap assemblies. | |
| 10 | | | | | Operates hoist to lower handling beam to storage position; disengages hoist. | | Removes handling beam from rocket and stows it on handling unit assisted by No. 6. | Assists No. 5 in removing and stowing handling beam. Removes guide ropes from handling beam. | | | | Operates beam traverse drive assembly to transfer handling beam M405; operates hydraulic lift to disengage beam assembly from A-frame. |
| 11 | | | Handles left guide rope on beam assembly; removes guide rope. | | Assisted by No. 4, removes A-frame from launcher and stows on handling unit. | Assists No. 3 in removing and stowing A-frame. | Handles right guide rope on beam assembly; removes guide rope. | Disconnects chain securing handling unit to launcher when required. | Assists No. 6 in disconnecting handling unit from launcher when required. | | | Assisted by Nos. 1 and 5, swings beam assembly to traveling position. |
| 12 | | Connects heating blankets when directed. | Couples handling unit to prime mover; raises jack to traveling position. | Places left rear launcher platform in traveling position. | Secures hoist chain to hydraulic column. | | Releases handling unit parking brakes (right and left). | Places left platform on handling unit in traveling position. | Retracts snubber. | Places right rear launcher platform in traveling position. | Removes and stows ladder. | Operates hydraulic lift to lower beam to traveling position and positions hoist. |

Table III. Duties in Preparing the Launcher for Action
(1) AN/MMQ-1 WINDSET

| Sequence | Chief of section | Gunner | No. 1 | No. 2 (driver) | No. 3 | No. 4 | Senior assembly specialist | Assembly specialist 1 | Assembly specialist 2 |
|---|---|---|---|---|---|---|---|---|---|
| 1 | Directs launcher, section truck and low-level wind equipment into position. | | | Positions launcher as directed and sets brake. | | | | | |
| 2 | | Places left rear platform assembly in the extended position. | Places right rear platform assembly in the extended position. | Secures cab and windshield for firing. | Lowers rear stabilizing jack to the ground and then takes 6-1/2 additional turns. Places jack handle in the travel position. | Lowers left stabilizing jack to the ground and then takes 3-1/2 additional turns. Places jack handle in the travel position. | Removes ladder from right front fender and places it under the rear of the launching beam. Removes drawbar or restraining device assembly from the rear shoe of the rocket. | Calibrates the M17 multimeter. Performs the required check of the M35 firing box assembly. | Lowers right stabilizing jack to the ground and then takes 3-1/2 additional turns, places jack handle in the travel position. |
| 3 | | Locks the folding beam firing position lock in the firing position. | Unlocks right forward section of launching beam and swings it into the firing position. | Unlocks left forward section of launching beam and swings it into the firing position. | Unlocks right bottom carriage travel lock. | Unlocks left bottom carriage travel lock. Unlocks launching beam travel lock. | Removes rear strap assembly and positions left rear traveling clamp shoe in the firing position. | Removes front and center strap assemblies and positions left (front and center) traveling clamp shoes in the firing position. | Removes front and center strap assemblies and positions right (front center and rear) traveling clamp shoes in the firing position. Stows all strap assemblies. |
| 4 | Measures site to mask when required. (Should be done prior to occupation of position.) | Removes panoramic telescope from storage case and mounts telescope in sight bracket. | Directs No. 2 in cross-leveling. | Emplaces front and rear boresight assemblies. As directed by No. 1 cross-levels the launcher using the cross-level handwheel. | Lays wire from fire control point to the launcher and installs telephone at the launcher. | | Directs installation of fins. | Installs fins as directed. | Installs fins as directed. |
| 5<br>5 (cont) | Checks cross-level. | | Places the power elevating shifter rod in the power elevate position. Directs No. 2 to power elevate to 800 mils (M31 rocket) and then depresses to 210 mils. Verifies cross-level using the fire control quadrant. | Power elevates and depresses the launcher beam as directed by No. 1. | | | | | |
| 6 | Checks boresight. | Performs boresighting procedures. Reads and reports the propellant temperature to the chief of section. | | | | | Nonnuclear: Assisted by the assembly specialists, checks out the rocket motor and firing circuits as directed<br>Nuclear: Performs duties in accordance with TM 9-1100-200-12. | | |
| 7 | Reports referred deflection, site to mask, and propellant temperature to the FDC. Reports to the section commander when prepared for action. | Lays the launcher for direction. | | Removes and stows boresight assemblies. | | | | | |

Table III. Duties in Preparing the Launcher for Action
(2) AN/PMQ-6 Windset

| Sequence | Chief of section | Gunner | No. 1 | No. 2 (driver) | Senior assembly specialist | Assembly specialist 1 | Assembly specialist 2 |
|---|---|---|---|---|---|---|---|
| 1 | Directs launcher, section truck, and low-level wind equipment into position. | | | Positions launcher as directed and sets brake. | | | |
| 2 | | Places left rear platform assembly in the extended position. | Places right rear platform assembly in the extended position. | Secures cab and windshield for firing. | Lowers rear stabilizing jack to the ground and then takes 6-1/2 additional turns. Places jack handle in travel position. | Lowers left stabilizing jack to the ground and then takes 3-1/2 additional turns. Places jack handle in the travel position. | Lowers right stabilizing jack to the ground and then takes 3-1/2 additional turns. Places jack handle in the travel position. |
| 3 | | Unlocks left bottom carriage travel lock. | Unlocks right bottom carriage travel lock. Unlocks launching beam travel lock. | Emplaces front and rear boresight assemblies. | Removes ladder from right front fender and places it under the rear of the launching beam. Removes drawbar or restraining device assembly from the rear shoe of the rocket. | Calibrates the M17 multimeter. | Performs the required check of the M35 firing box assembly. |
| 4 | | Locks the folding beam firing position lock in the firing position. | Unlocks right forward section of launching beam and swings it into the firing position. | Unlocks left forward section of launching beam and swings it into the firing position. | Removes rear strap assembly and positions left rear traveling clamp shoe in the firing position. | Removes front and center strap assemblies left (front and center) traveling clamp shoes in the firing position. | Removes front and center strap assemblies and positions right (front, center, and rear) traveling clamp shoes in the firing position. Stows all strap assemblies. |
| 5 | Measures site to mask when required. (Should be done prior to occupation of position.) | Removes panoramic telescope from stowage case and mounts telescope in sight bracket. | Directs No. 2 in cross-leveling. | As directed by No. 1, cross-levels the launcher using the cross-level handwheel. | Directs installation of fins. | Installs fins as directed. | Installs fins as directed. |
| 6 | Checks cross-level. | | Places the power elevating shifter rod in the power elevate position. Directs No. 2 to power elevate to 800 mils (M31 rocket) and then depresses to 210 mils. Verifies cross-level using the fire control quadrant. | Power elevates and depresses the launcher beam is directed by Number 1. | | | |
| 7 | Checks boresight. | Performs boresighting procedures. Reads and reports the propellant temperature to the chief of sections. | | Lays wire from the fire control point to the launcher and installs telephone at the launcher. | Non-nuclear: Assisted by the assembly specialists, checks out the rocket motor and firing circuit as directed. Nuclear: Performs duties in accordance with TM 9-1100-200-12. | Assist the senior assembly specialist as directed. | |
| 8 | Reports referred deflection site to mask and propellant temperature to the FDC. Reports to the section commander when prepared for action. | Lays the launcher for direction. | | Removes and stows boresight assemblies. | | | |

Table IV. Duties in Preparation for Action (Windset)

| Sequence | Wind Measuring Set AN/PMO-6 | | | | Wind Measuring Sets AN/MPQ-1A or AM/MPQ-1B | |
|---|---|---|---|---|---|---|
| | No. 3 | No. 4 | No. 5 | No. 6 | No. 5 | No. 6 |
| 1 | Directs windset vehicle into position. | | | Positions vehicle as directed. | Directs No. 6 in positioning windset equipment. | Positions windset equipment as directed. |
| 2 | Assisted by Nos. 4, 5, and 6 unloads windset equipment. Places head of mast on indicator box with mast base pointed into wind with two base legs up. | Assists No. 3. | Assists No. 3. | Assists No. 3. | Sets wind equipment parking brakes. Lowers and locks support legs and jacks. | Unloads equipment. Removes to motor park. |
| 3 | Removes protective cap. Assembles windwpeed transmitter and attaches to mast. Attaches signal transmission cable to windspeed transmitter. | Loosens support leg lockring. Releases support leg retaining levers. Extends two base legs; swings two support legs from mast and clamps to base legs. | Removes mounting feet from guy accessory case; places for use by No. 4. Attaches long guys to upper guy rings. | Assembles pump box. Attaches short guys to lower guy rings. | Assembles windspeed transmitter and secures to mast. | Lowers front jack. Assists No. 5. |
| 4 | | Mounts two mounting feet in two extended base legs. | Extends guys away from mast, assisted by No. 6. | Assists No. 5. | Attaches signal transmission cable to mast. | Puts out guy cables and stakes. |
| 5 | Places indicator box at fire control point. | Erects mast to vertical position, assisted by No. 6. | Obtains guy stakes, stake heads, and sledge hammer. Drives guy stakes 50 feet from mast on line with base legs. | Assists No. 4 in erecting mast. | Attaches guy cables to mast. Levels trailer. | Assists No. 5 in leveling trailer. |
| 6 | Lays windset mast for direction. | Extends third base leg, clamps support leg to base leg. Mounts mounting foot. Lowers and tightens support leg lockring. Turns and locks base plate. Levels mast. | | Assists No. 4. | Raises mast to upright position and clamps in place. | Assists No. 5 in raising mast and in clamping mast in position. Starts PE-75. |
| 7 | Attaches signal transmission cable and indicator to junction box. Lays indicator transmission cable to fire control point. | Extends guys. Attaches short guys to guy stakes as third mast section is raised to maximum and attaches long guys to stakes as soon as mast is fully raised. | Assists No. 4. Relieves No. 6 on pump. | Attaches airhose to mast. Raises mast by operating pump. Assists No. 4 when relieved by No. 5. | Lays mast for direction. Raises mast. | Assists No. 5 in laying mast for direction and in raising mast. |
| 8 | Calibrates data indicator box. Connects indicator transmission cable to data indicator box. | Tightens guys and checks level, assisted by Nos. 5 and 6. | Assists No. 4. | Lays wire line from fire control point to windset. Installs telephone at windset. | Lays line to fire control point. Callibrates data indicator box at fire control point. | Lays wire line from fire control point to windset. Installs telephone at windset. |

Table V. Duties in Firing

| Sequence | Chief of section | Gunner | No. 1 | No. 2 | No. 3 | No. 4 | No. 5 | No. 6 | Senior assembly specialist | Assembly specialist 1 | Assembly specialist 2 |
|---|---|---|---|---|---|---|---|---|---|---|---|
| 1 | Follows fire commands. Supervises section. Announces initial deflection and quadrant elevation. | Lays launcher on initial deflection. | Lays launcher on initial quadrant elevation (directs No. 2 in power elevation. Fine adjusts using handwheel). | Power elevates as directed by No. 1. | Records low-level wind lateral and head or tail components. Computes corrections for low-level wind. Announces low-level wind corrections to the section commander. | | | | Nonnuclear: Completes checkout of rocket motor and firing circuit as directed. Nuclear: Performs duties in accordance with TM 9-1100-200-12. Supervises activity of assembly specialists. | | |
| 2 | Reports mistakes or unusual incidents to platoon commander. | Removes thermometer and places in case. | Pulls all quick release devices to remove electric blankets. | Removes electric blankets from left side assisted by No. 6. | | Assists No. 5 in removing electric blankets (right side). | Removes electric blankets from right side assisted by No. 4. | Assists No. 2 in removing electric blankets (left side). | | | |
| 3 | | | | | | | | | Assisted by the assembly specialists completes checkout and preparation of the rocket motor for firing. | Assists the senior assembly specialist to check out and prepare the rocket motor for firing. | Assists the senior assembly specialist to check out and prepare the rocket motor for firing. |
| 4 | Announces and checks final deflection, time, and quadrant elevation. Insures that pedestal access doors are secured, spin rocket ignition switch installed, travel locks pinned in the retracted position, pins removed from front and rear launching shoes (M50), lanyard attached (M31), launcher is cross-leveled, sight is removed, and launcher is secure. | Lays launcher on final deflection. | Lays launcher on final quadrant elevation (directs No. 2 in power elevation. Fine adjusts using handwheel). Supervises No. 2 in cross-leveling launcher beam. | Power elevates as directed by No. 1. Cross-levels launcher beam using cross-level handwheel as directed by No. 1. | | | | | Fuzes and arms the rocket. | | |
| 5 | | Removes panoramic telescope and places in stowage case. | Removes telephone from blast area. | | | | | Replaces ladder assembly on right front fender. | | | |
| 6 | Upon receipt of reports from gunner, No. 2 and the senior assembly specialist, reports to section commander ready to fire. | Reports launcher laid and ready to fire. | | Reports launcher safe to fire. | | | | | Reports rocket ready to fire. | Conducts final continuity of firing circuit. | |
| 7 | Supervises firing sequence. Reports to FDC: deflection, QE, and time fired. | | | | | | | | | Fires rocket on order. | |

Table VI. Duties in March Ordering the Launcher
(1) AN/MMQ-1 Windset

| Sequence | Chief of section | Gunner | No. 1 | No. 2 | No. 3 | No. 4 | Senior assembly specialist | Assembly specialist 1 | Assembly specialist 2 |
|---|---|---|---|---|---|---|---|---|---|
| 1 | Inspects equipment for loss or damage. Supervises work of section. | Traverses launching beam to center. | Directs No. 2 in power depression of beam. | Depresses beam by power as directed by No. 1 centers cross-level mechanism, using cross-level hand wheel. | Raises rear stabilizing jack to travel position. | Raises left stabilizing jack to travel position. | Supervises activities of assembly specialists. Prepares tools and equipment for travel. | Closes and locks cover of electrical test panel. | Raises right stabilizing jack to travel position. |
| 2 | | Assisted by No. 1, depresses launcher beam from 6° to 0° with elevating hand wheel. | Assists gunner in hand depressing launcher from 6° to 0°. | Locks launching beam travel lock. Unlocks launcher beam firing lock. | Locks right bottom carriage traveling lock. | Locks left bottom carriage traveling lock. | | Places left rear platform assembly in traveling position. | Places right rear platform assembly in traveling position. |
| 3 | | | Swings right forward section of launcher beam to traveling position and locks in place. | Swings left forward section of launcher beam to traveling position and locks in place. | | March orders fire control point and stows equipment. | | | |
| 4 | | Directs loading of equipment. | | Assists in loading equipment as directed. | Assists in loading equipment as directed. | Assists in loading equipment as directed. | | Assists in loading equipment as directed. | Assists in loading equipment as directed. |
| 5 | Upon receipt of reports from No. 2 and the senior assembly specialist, reports to section commander when ready to move. | | | Reports to chief of section when launcher is ready to move. | | | Reports to chief of section when ready to move. | | |

Table VI. Duties in March Ordering the Launcher
(2) AN/PMQ-6 Windset

| Sequence | Chief of section | Gunner | No. 1 | No. 2 | Senior assembly specialist | Assembly specialist 1 | Assembly specialist 2 |
|---|---|---|---|---|---|---|---|
| 1 | Inspects equipment for losses or damage Supervises work of section. | Traverses launching beam to center. | Directs No. 2 in power depression of beam. | Depresses beam by power as directed by No. 1. Centers cross-level mechanism, using cross-level handwheel. | Raises rear stabilizing jack to travel position. | Raises left stabilizing jack to travel position. | Raises right stabilizing jack to travel position. |
| 2 | | Assisted by No. 1, depresses launcher beam from 6° to 0° with elevating handwheel.<br>Locks left bottom carriage traveling lock. | Assists gunner in hand depressing launcher from 6° to 0°.<br>Locks right bottom carriage traveling lock. | Locks launcher beam travel lock. Unlocks launcher beam firing lock.<br>Swings left forward section of launcher beam to traveling position and locks in place. | Prepares tools and equipment for travel. | Places left rear platform assembly in traveling position. | Places right reat platform assembly in traveling position.<br>Swings right forward section of launching beam to traveling position and locks in place. |
| 4 | | Directs loading of equipment. | Assists in loading equipment as directed. | March orders fire control point and stows equipment. | | Assists in loading equipment as directed. | Assists in loading equipment as directed. |
| 5 | Upon receipt of reports from No. 2 and the Senior assembly specialist, reports to section commander when ready to move. | | | Reports to chief of section when launcher is ready to move. | Reports to chief of section when ready to move. | | |

Table VII. Duties in March Order (Windset)

| | Wind measuring set AN/PMQ-6 | | | | Wind Measuring Sets AN/MMQ-1A and AN/MMQ-1B | |
|---|---|---|---|---|---|---|
| Sequence | No. 3 | No. 4 | No. 5 | No. 6 | No. 5 | No. 6 |
| 1 | Prepares data indicator box for travel and carries it to windset location. | Lowers mast. Removes air hose from mast. | Removes guys from guy stakes. Pulls guy stakes and stores in accessory case. | Moves vehicle to windset location. | Prepares data indicator box for travel and carries it to windset location. | Moves vehicle to windset position for loading. |
| 2 | Recovers indicator transmission cable and signal transmission cable and stores in windspeed transmitter case. | Assists No. 5. | Recovers guys and stores in guy accessory case assisted by No. 4. | Disassembles pump box. | Lowers mast. | Takes out stakes, guys, and cables. |
| 3 | | Unlocks and turns base plate; loosens support leg lockring; unclamps one support leg and folds support leg and base leg to mast and locks in place, assisted by No. 6. | | Assists No. 4. | Assisted by No. 6. Releases guy cables from mast. Folds mast to traveling position. | Assists No. 5 in lowering mast and in folding mast to traveling position. |
| 4 | Disassembles windspeed transmitter and stores in windspeed transmitter case. Replaces protective cap. Attaches mast retaining cable. | Lowers mast to horizontal position with top of mast on indicator box; unclamps and folds support legs and base legs to mast and locks in place; tightens support leg lockring assisted by No. 6. | Recovers mounting feet and places in guy accessory case. | Assists No. 4. | Detaches and disassembles windspeed transmitter. Detackes signal transmission cable. | Packs stakes, guys, and cables. |
| 5 | Loads windset equipment, assisted by Nos. 4, 5, and 6. | Assists No. 3. | Assists No. 3. | Assists No. 3. | Assisted by No. 6, raises rear jack. Replaces cover. | Raises front jack. Assists No. 5 in replacing cover. |
| 6 | | | | | Connects lunette to vehicle. Engages safety chains. Raises support leg. | Recovers wire line from fire control point to windset. Loads telephone and wire. |

Table X. Duties in Assembly Using Wrecker

| Sequence | Chief of section | Senior assembly specialist | Assembly specialist | Launcher crewman (No. 1) | Launcher crewman (No. 2) (heavy truck driver) | Launcher crewman (No. 3) (wrecker operator) |
|---|---|---|---|---|---|---|
| 1 | Directs vehicles into position. | Lowers jack assembly on handling unit, when required. | Sets right parking brake on handling unit. | Sets left parking brake on handling unit. | Positions handling unit and vehicle as directed. | Positions wrecker as directed. |
| 2 | Supervises preparation for assembly. | Lowers left front wrecker outrigger. | Lowers right front wrecker outrigger. | Lowers left rear wrecker outrigger. | Lowers right rear wrecker outrigger. | Positions wrecker boom. |
| * 3 | | Removes screws from lid of rocket shipping container; directs wrecker operator in removal of lid. | Assists senior assembly specialist as required. | Assists senior assembly specialist as required. | Assists senior assembly specialist as required. | Removes rocket shipping container lid, using wrecker boom. |
| 4 | | Assisted by the assembly specialist, removes strap assemblies from rocket. | Assists senior assembly specialist in removing strap assemblies. | Connects wrecker boom to handling beam. Installs handling beam on rocket shoes. Adjusts lifting assembly to proper center of gravity. | Assists launcher crewman No. 1 in installing handling beam. Installs guide ropes on handling beam. | Operates wrecker boom to transfer handling beam from handling unit to a position above rocket. |
| 5 | Directs transfer of rocket. Disconnects wrecker boom from handling beam. | Handles left front guide rope on handling beam. | Handles right front guide rope on handling beam. | Handles left rear guide rope on handling beam. | Handles right rear guide rope on handling beam. | Operates wrecker boom. |
| 6 | Supervises assembly operations. | Assisted by the assembly specialist, performs inspection and electrical tests of rocket. | Assist senior assembly specialist in performing electrical tests of rocket. Operates ratchet to raise rollers in rocket motor saddles when it is necessary to rotate the rocket for test or assembly. | Installs rear launcher shoe adapters and checks with GO/NO GO gage. | Assists launcher crewman No. 1 in installing rear launching shoe adapters. | |
| 7 | | | | Removes screws from lid of warhead shipping container; directs wrecker operator in removal of lid. | Assists launcher crewman No. 1 in removal warhead shipping container lid. | Removes warhead shipping container lid, using wrecker boom. |
| 8 | | | | Removes strap assemblies from warhead and installa handling sling. | Assists launcher crewman No. 1 in removing strap assemblies and installing handling sling. | Operates wrecker boom. |
| 9 | Directs transfer of warhead and assembly operations. | Assisted by the assembly specialist, assembles warhead to rocket. | Assists senior assembly specialist in assemblying warhead to rocket. | Guides rear of warhead. | Handles front guide rope on handling sling. | |
| 10 | Disconnects wrecker boom from handling sling. Performs inspection of warhead. | Assists chief of section in warhead inspection. | Removes handling sling from warhead. Connects heating blankets when required. | Prepares rocket for fin installation (when directed). Installs fins. | Assists launcher crewman No. 1 in installing fins. | |
| 11 | | Installs strap assemblies on rocket and warhead. | Assists senior assembly specialist in installing strap assemblies. | Raises left wrecker outriggers. | Raises right wrecker outriggers. | |

* Performed when rocket and warhead are in shipping containers only.

Table XI. Duties in Rocket Assembly Using M405 Handling Unit

| Sequence | Chief of section | Senior assembly specialist | Assembly specialist | No. 1 launcher crewman | No. 2 launcher crewman (heavy truck driver) | No. 3 launcher crewman (wrecker operator) | No. 4 launcher crewman | No. 5 launcher crewman | No. 6 launcher crewman |
|---|---|---|---|---|---|---|---|---|---|
| 1 | Directs vehicles into position. | | Sets right parking brake on handling unit. | Sets left parking brake on handling unit. | Places jack assembly on handling unit in vertical position and lowers jack to uncouple prime mover from handling unit (when directed). | | Places left platform on handling unit in loading position. | | |
| 2 | Supervises assembly operations. | *Removes screws from lid of rocket shipping container, assisted by the assembly specialist, and No. 1 launcher crewman. | *Assists senior assembly specialist. | *Assists senior assembly specialist. | Disengages hook of chain hoist from lug on hydraulic lift assembly. | Attaches guy ropes to beam assembly. | | Remove A-frame from stowage position on handling unit and install in sockets 3 and 4 on the heating and tiedown units; support A-frame until engaged by the beam assembly. | |
| 3 | | | | | Operates hydraulic pump to extend hydraulic lift to maximum height. | Swings beam assembly to a position above the A-frame, using guy ropes, assisted by No. 3 launcher crewman. | Assists No. 2 launcher crewman in swinging beam assembly. | | |
| 4 | | | | | Operates hydraulic pump to lower beam assembly to engage A-frame; continued to lower beam assembly to permit slack in link assembly. | | | | |
| 5 | | *Directs No. 2 launcher crewman in removing lid from shipping container. | | | Traverses hoist to position over rocket. *Removes lid from container using hoist. | Disconnects all cables from heating blanket sections. | | *Assists No. 2 launcher crewman in removing lid. | |
| 6 | | Removes strap assemblies from rocket, assisted by No. 3 launcher crewman. | Installs handling beam on rocket shoes. Adjusts lifting assembly to proper center of gravity. | Assists assembly specialist in installing handling beam. | Traverses hoist to position over handling beam. Transfers handling beam to position above rocket. | Assists senior assembly specialist in removing strap assemblies. | Installs front guy ropes on handling beam. | Assists No. 2 launcher crewman in transferring handling beam. | Installs rear guide ropes on handling beam. |
| 7 | | Loosens electric blankets to permit positioning of rocket in handling unit saddles. | Handles right front guide rope on handling beam. | Handles left front guy rope on handling beam. | Attaches hoist hook to rocket handling beam; operates hoist to raise rocket motor from saddles of heating and tiedown kit, assisted by No. 5 launcher crewman. | Handles left rear guy rope on handling beam. | Handles right rear guy rope on handling beam. | Assists No. 2 launcher crewman in operating hoise and beam traverse assembly. | Assists No. 2 launcher crewman as required. |
| 8 | | | | | Operates hoise to raise rocket to clear handling unit generator; operates beam traverse assembly to position rocket above saddles on handling unit. | | | | |
| 9 | Handles guy rope on beam assembly until relieved by No. 6 launcher crewman. | Handles guy rope on beam assembly. | | | Operates hydraulic pump to lift beam assembly from A-frame. | | | Supports and removes A-frame from heating and tiedown unit. | Assists No. 5 launcher crewman in supporting and removing A-frame; takes over guy rope from chief of section. |
| 10 | Supervises assembly operations. | Swings outer end of beam assembly toward the rear of the handling unit to properly position the rocket over the saddles. | | | Operates beam traverse assembly to establish proper position of rocket over saddles on handling unit. | | | Assists No. 2 launcher crewman in traversing rocket. | Assists senior assembly specialist in swinging beam assembly. |
| 11 | | Handles guy rope on beam assembly. | | | Operates hoist to lower the rocket motor into saddles. | | | Assists No. 2 launcher crewman in operating hoist. | Handles guy rope on beam assembly. |
| 12 | Removes hoist from handling beam. Directs repositioning of heating and tiedown unit. | Performs inspection and electrical tests of rocket. | Assists senior assembly specialist in performing electrical tests of rocket. | Installs rear launcher shoe adapters and checks with GO/NO-GO gage. | Traverses hoist to a position over warhead. | Repositions heating and tiedown unit as directed. Assists No. 1 launcher crewman in installing rear shoe adapters. | Repositions beam assembly over heating and tiedown unit, using guy ropes. | *Removes screws from lid of warhead shipping container. | *Assists No. 5 launcher crewman in removing screws from lid. |
| 13 | Supervises assembly and tests. | | | | Operates hydraulic pump to lower beam assembly to engage A-frame. | | | Installs A-frame in sockets 1 and 2 on heating and tiedown unit; supports until engaged by beam assembly. | Assists No. 5 launcher crewman in installing A-frame. |
| 14 | | | | Installs upper fins on rocket, when directed. | *Operates traverse assembly to position lid of shipping container. | Assists No. 1 launcher crewman in installing upper fins. | | *Operates beam assembly hoist to remove lid from shipping container. | *Assists No. 5 launcher crewman in removing lid. |
| 15 | | | | | Positions hoist over warhead. | | Installs guy ropes on handling sling. | Removes strap assemblies from warhead and installs handling sling. | Assists No. 5 launcher crewman in removing strap assemblies. |
| 16 | Attaches hoist hook to warhead handling sling. Supervises transfer and assembly operation. | | | | Operates beam traverse assembly to position warhead over handling unit. | Handles front guy rope on handling sling. | Handles rear guide rope on handling sling. | Operates hoist to raise warhead. Assists No. 5 launcher crewman in traversing warhead. | Assists No. 5 launcher crewman in operating hoist. |
| 17 | | | Handles guy rope on beam assembly. | Handles guy rope on beam assembly. | Operates hydraulic pump to lift beam assembly from A-frame. | | | Supports and removes A-frame from heating and tiedown unit. | Assists No. 5 launcher crewman in supporting and removing A-frame. |
| 18 | | | Swings beam assembly forward, using guy rope to properly position warhead over saddle. | Assists assembly specialist in swinging beam assembly. | Operates beam traverse assembly to establish proper position of warhead over saddles on handling unit. | | | Assists No. 2 launcher crewman in traversing warhead. | |
| 19 | | Performs inspection and test of warhead; supervises assembly operation. | Handles guy ropes on beam assembly. | Handles guy ropes on beam assembly. | Operates hoist to lower warhead to assembly position. | | | Assists No. 2 launcher crewman in operating hoist. | |
| 20 | | | Assembles warhead to rocket. | Assists assembly specialist in assembling warhead. | | | | Handles guy ropes on beam assembly. | Handles guy ropes on beam assembly. |
| 21 | | | Connects electric blankets (when required). | Connects electric blankets (when required). | Operates hydraulic pump to lower beam assembly to traveling position. | Disconnects hoist hook from warhead handling sling. | Removes warhead handling sling. | Straps rocket to saddles of handling unit. | Assists No. 5 launcher crewman in strapping rocket saddles of handling unit. |
| 22 | | | | | Raises jack assembly on handling unit after prime mover is in position. | | Places left platform on handling unit in traveling position. | | |

*Performed when rocket and warhead are in shipping containers only.

Table XII. Duties in Assembling Rocket on Cart (Motor on Skid) with Tripods

| Sequence | Chief of section | Gunner | No. 1 | No. 2 | No. 3 | No. 4 | No. 5 | No. 6 | Senior assembly specialist | Assembly specialist 1 | Assembly specialist 2 |
|---|---|---|---|---|---|---|---|---|---|---|---|
| 1 | Directs positioning of warhead cart near rocket motor skid and section equipment. | Positions warhead as directed. | Assists gunner. | Assists gunner. Unloads and assembles chain hoist for small tripod. | Unloads and assembles chain hoist for large tripod. | Assists No. 3. | Assists gunner. | Assists No. 3. | Assists gunner. | | Assists gunner. |
| 2 | Supervises assembly operation. | Unloads small tripod, assembles, and emplaces over warhead. | Assists gunner. Extends legs of tripod, attaches shoes, and secures chains between legs. | Assists gunner. Attaches chain hoist to tripod. | Assists assembly specialist 1. Attaches chain hoist to tripod. | Assists assembly specialist 1. Extends legs or tripod, attaches shoes, and secures chains between legs. | Assists gunner and No. 1. | Assists assembly specialist 1 and No. 3. | Directs assembly specialist 1 and No. 4 to emplace tripod. | Unloads large tripod, assembles, and emplaces over skid. | Assists assembly specialist 1 and No. 3. |
| 3 | | Releases rear strap assembly on warhead. | Emplaces warhead sling in proper position. Attaches guide ropes. | Attaches hoist hook to head sling. | Attaches hoist hook to handling beam. | Installs handling beam on rocket as directed. | Releases front strap assembly on warhead. | Assists No. 3. | Releases rear strap assemblies on motor. | Releases front strap assemblies on motor. | Assists No. 3 (if required). Attaches guide ropes. |
| 4 | | Guides rear of warhead. | Assists No. 2. | Hoists warhead clear of cart. | Hoists motor clear of skid. | Guides front of motor. | Guides front of warhead. | Assists No. 3. | Guides right rear of motor. | Guides right front of motor. | Guides left rear of motor. |
| 5 | | Removes cart, extends it to full length, and emplaces beneath motor. | Assists gunner. | Assists gunner. | Assists assembly specialist 1. | | | Assists assembly specialist 1. | | Removes skid. | |
| 6 | | Directs positioning of motor on cart. | Assists gunner. Engages rear strap assembly. | | Lowers motor to proper position on cart. Disengages hook from handling beam. | | | Assists No. 3. | | Assists gunner. Engages front strap assembly on motor. | |
| 7 | | Moves cart to assemble motor with warhead. Directs lowering of warhead. | Assists No. 2. | Lowers warhead as directed by gunner. | Guides rear of warhead. | Assists assembly specialist 1. | | Assists gunner. | Assists gunner. | Tightens warhead bolts to mate with motor. | Assists gunner. |
| 8 | | Removes and stores small tripod. | Assists gunner. Closes and retracts legs, removes shoes and secures and stores. | Disengages chain hoist from warhead and tripod; secures and stores. | Disengages chain hoist from large tripod; secures and stores. | Assists assembly specialist 1. Closes and retracts legs, removes shoes and chains, and secures and stores. | Assists gunner and No. 1. | Assists No. 3. | Directs assembly specialist 1 and No. 4 to stow tripod. | Removes and stores large tripod. | Assists assembly specialist 1 and No. 4. |

Table XIII. Duties in Assembling Rocket on Skid (Warhead On Cart) With Tripod

| Sequence | Chief of section | Gunner | No. 1 | No. 2 | No. 3 | No. 4 | No. 5 | No. 6 | Senior assembly specialist | Assembly specialists |
|---|---|---|---|---|---|---|---|---|---|---|
| 1 | Directs positioning of warhead cart near rocket motor skid and section equipment. | Positions warhead near forward end on rocket motor skid. | Assists gunner. | Assists gunner. Unloads and assemblies chain hoist for small tripod. | Assists gunner. | Performs duties as prescribed. | Assists gunner and assistant gunner. | | Supervises activities of assembly specialist. | Move rocket motor on skid as necessary to prepare for assembling warhead. |
| 2 | Supervises assembly operation. | Unloads small tripod, assembles, and emplaces over warhead. | Assists gunner. Extends tripod legs, attaches shoes, and secures chains between legs. | Assists gunner. Attaches chain hoist to tripod. | | | | | | |
| 3 | | Releases rear strap assembly on warhead. | Emplaces warhead sling in proper position. Attaches guide ropes. | Attaches hoist hook to warhead sling. | Assists No. 1. | | Releases front strap assembly on warhead. | | | |
| 4 | | Directs hoisting of warhead. | Assists No. 2. | Hoists warhead clear of cart. | Guides rear of warhead. | | Guides front of warhead. | | | Remove cart. |
| 5 | | Directs lowering of warhead. | | Lowers warhead as directed by gunner. | | Releases roller stops on skid as directed. | | Assists No. 4. | | Tighten warhead bolts to assemble warhead to motor. |
| 6 | | Removes and stores small tripod. | Assists gunner. Closes and retracts legs, removes shoes and chains, and secures and stores. | Disengages chain hoist from warhead and tripod; secures and stores. | Assists gunner. | Locks roller stops in proper position as directed. | Assists gunner and No. 1. | Assists gunner. | | |

Table XIV. Duties in Assembling Rocket on Cart (Motor On Cart) with Tripod

| Sequence | Chief of section | Gunner | No. 1 | No. 2 | No. 3 | No. 4 | No. 5 | No. 6 | Senior Assembly specialist | Assembly specialists |
|---|---|---|---|---|---|---|---|---|---|---|
| 1 | Directs positioning of warhead cart, rocket motor cart, and section equipment. | Unloads small tripod, assemblies, and emplaces. | Assists gunner. Extends tripod legs attaches shoes, and secures chains between legs. | Unloads and assembles chain hoist for small tripod. Attaches to tripod. | Assists gunner. | Assists gunner. | Assists gunner and No. 1. | | Supervises activities of assembly specialists. | Position rocket motor as required. |
| 2 | Supervises assembly operation. | Positions warhead beneath tripod. Releases rear strap assembly on warhead. | Emplaces warhead sling in proper position. | Attaches hook to sling. | Assists gunner. | Assists gunner. | Assists gunner. Releases front strap assembly on warhead. | Assists gunner. | | |
| 3 | | Removes cart when warhead is clear. | Assists No. 2. | Hoists warhead clear of cart. | Assists gunner. Guides rear of warhead. | | Guides front of warhead. | Releases roller stops on skids (if applicable). | | |
| 4 | | Positions motor. Directs mating. | Assists No. 2. | Lowers warhead as directed. | | Assists gunner. | | | | Tighten warhead bolts to assemble warhead to motor. |
| 5 | | Removes and stores small tripod. | Asists gunner. Closes and retracts legs, removes shoes and chains, and secures and stores. | Disengages chain hoist from warhead and tripod; secures and stores. | Assists gunner. | | Assists gunner and No. 1. | Locks roller stops in proper position (if applicable). | | |

Table XV. Duties in Assembling Rocket on Cart from Containers With Tripods

| Sequence | Chief of section | Gunner | No. 1 | No. 2 | No. 3 | No. 4 | No. 5 | No. 6 | Senior Assembly specialist | Assembly specialists |
|---|---|---|---|---|---|---|---|---|---|---|
| 1 | Supervises asembly operation. | Removes riggings, walls, and top of warhead container. | Assists gunner. | Removes rigging from section equipment (if applicable). | Assists No. 2 (if applicable). | | Assists gunner. | Removes rigging from cart (if applicable). | Supervises activities of assembly specialist. | Remove rigging, walls, and top of motor container. |
| 2 | | Unloads small tripod, assembles, and emplaces over warhead. | Assists gunner. Extends tripod legs, attaches shoes, and secures chains between legs. | Unloads and assembles chain hoist for small tripod. Attaches to tripod. | Unloads and assembles chain hoist for large tripod. Attaches to tripod. | Extends tripod legs, attaches shoes, and secures chains between legs. | Assists gunner and No. 1. | Assists No. 4. | | Unload, assemble, and emplace large tripod over motor. |
| 3 | | Releases rear strap assembly on warhead. | Emplaces warhead sling in position. Attaches guide ropes. | Attaches hoist hook to warhead sling. | Attaches hoist hook to handling beam. | Installs handling beam on motor. | Releases front strap assembly on warhead. | Assists No. 4. | | Release front and rear strap assemblies on motor. |
| 4 | | Guides rear of warhead. | Assists No. 2. | Hoists warhead clear of container. | Hoists motor clear of container. | Guides front of motor. | Guides front of warhead. | Assists No. 4. | Guides rear of motor. | |
| 5 | | Removes warhead container. | Assists gunner. | Assists gunner. | | | | | | Remove container. Emplace cart under rocket. |
| 6 | | Directs positioning of motor on cart. | Assists gunner. Engages rear strap assembly. | | Lowers motor to proper position on cart. Disengages hook from handling beam. | | | Assists No. 4. | | Assist gunner. Engage front strap assembly on motor. |
| 7 | | Moves cart to assemble motor with warhead. Directs lowering of warhead. | Assists No. 2. | Lowers warhead as directed by gunner. | Guides rear of warhead. | | | Assists gunner. | Assists gunner. | Tighten warhead bolts to mate with motor. |
| 8 | | Removes and stores small tripod. | Assists gunner. Closes and retracts legs, removes shoes and chains, and secures and stores. | Disengages chain hoist from warhead and tripod; secures and stores. | Disengages chain hoist from large tripod and secures and stores. | Closes and retracts legs, removes shoes and chains, and secures and stores. | Assists gunner and No. 1. | Assists No. 4. | | Remove and store large tripod. |

Table XVI. Duties in Loading the Launcher With Tripod

| Sequence | Chief of section | Gunner | No. 1 | No. 2 | No. 3 | No. 4 | No. 5 | No. 6 | Senior assembly specialist | Assembly specialists |
|---|---|---|---|---|---|---|---|---|---|---|
| 1 | Directs launcher, rocket carrier,* and section carrier* into proper positions for loading. | Positions launcher near rocket carrier. | Assists gunner. | Assists gunner. | Assists gunner. | Assists gunner. | Assists gunner. | Assists gunner. | Supervises activities of assembly specialists. | Emplace section carrier* as required. |
| 2 | Supervises loading operation. | Directs loading operation. | Secures handling beam to rocket (if applicable). | Installs fins (if applicable). | Obtains chain hoist from section carrier; prepares for attachment to tripod. Attaches chain hoist to tripod. | Extends tripod legs, attaches shoes, and secures chains between legs. | Assists No. 1. (if applicable). | Assists No. 3. | | Remove large tripod, assemble and emplace over rocket carrier. |
| 3 | | | | Attaches guide ropes. | Hooks chain hoist to handling beam. | | | Assists No. 3. | Assists No. 1. | Release front and rear straps of rocket carrier. |
| 4 | | Positions rocket positioning jack assembly on launcher beam. | Handles right front guide rope. | Handles left front guide rope. | Raises rocket clear of carrier, using chain hoist. | Handles left rear guide rope. | Handles right rear guide rope. | Assists No. 3. | | |
| 5 | | Directs launcher into position under rocket. | | Assists gunner. | Assists gunner. | Assists gunner. | | Assists gunner. | | Remove rocket carrier. |
| 6 | | Guides rear rocket shoes into position. Jacks rocket into position. Secures drawbar to rear shoes of rocket. | | Handles left front guide rope. | Lowers rocket into launcher beam, using chain hoist. | Handles left rear guide rope. | | Assists No. 3. | | Guide front rocket shoes into slot in launcher rail. |
| 7 | | Positions left rear traveling clamp and installs strap assembly. | Removes handling beam; stores in section carrier. | Assists No. 1. | Disengages chain hoist from handling beam and tripod; stores in section carrier. | Positions left front and center traveling clamps and installs strap assemblies. | Assists No. 1, removes all guide ropes; stores in section carrier. | Assists No. 3. | Assists No. 3. | Position right, front, center, and rear traveling clamps and install strap assemblies. |
| 8 | | | | | | Disassembles, secures, and stores tripod. | Assists No. 4. | | | Disassemble tripod; store in section carrier. |

*Rocket carrier may be a skid cart or the M405 handling unit. Section carrier may be a delivery basket, vehicle, or trailer.

Table XVII. Specific Duties in Prepare for Action (Air-Transported)

| Sequence | Chief of section | Gunner | No. 1 | No. 2 | No. 3 | No. 4 | No. 5 | No. 6 | Senior assembly specialist | Assembly specialist 1 | Assembly specialist 2 |
|---|---|---|---|---|---|---|---|---|---|---|---|
| 1 | Directs launcher and section vehicles into position. | Assisted by No. 1 and No. 2, disconnects launcher from prime mover. | Assists gunner to disconnect launcher from prime mover. | Positions launcher as directed by chief of section. Assists gunner to disconnect launcher from prime mover. | Sets brake on right front wheel. Assists No. 6 to unload section equipment. | Sets brake on left front wheel. Assists No. 6 to unload section equipment. | Assists No. 6 to unload section equipment. | Moves section vehicle to launcher. Assisted by Nos. 3, 4, and 5, unloads section equipment. | | Assists in unloading as directed. | Assists in unloading. |
| 2 | | Removes sight unit from stowage case and mounts on dovetail plate. Lays launcher in approximate direction of fire. Directs Nos. 1, 2, 3, 4, and 5, to move the launcher in the appropriate direction. | Moves launcher as directed. | Moves launcher as directed. | Moves launcher as directed. | Moves launcher as directed. | Moves launcher as directed. | Positions MX-155/GT with telephone, and installs wire. Lays wire line to aiming circle. Parks vehicle as directed. | | | |
| 3 | | | Supervises Nos. 2, 3, 4, and 5 in jacking up launcher, removing wheels, and lowering and cross-leveling launcher with gunner's quadrant. | Obtains jack handle. Operates left rear leveling jack. Assists No. 3 in removing caster wheel. Lowers and levels launcher as directed. Replaced jack handle. | Obtains jack handle. Operates right rear leveling jack. Assists No. 2 in removing caster wheel. Lowers and levels launcher as directed. Replaces jack handle. | Obtains jack handle. Operates left front leveling jack. Removes left front wheel. Lowers and levels launcher as directed. Replaces jack handle. | Obtains jack handle. Operates right front leveling jack. Removes right front wheel. Lowers and levels launcher as directed. Replaces jack handle. | Lays wire line from fire control point to launcher. Installs telephone with head set at launcher. | Supervises removal of strap and traveling clamp assemblies. | Removes rear, center, and front strap assemblies. Removes left rear, left center, and left front traveling clamps. | Removes rear, center, and front strap assemblies. Removes right rear, right center, and right front traveling clamps. |
| 4 | | Assisted by No. 1, unlocks rear traversing locks. | Assists gunner to unlock rear traversing locks. | Emplaces front and rear bore sight assemblies. | Unlocks right side of traveling lock. Pulls right front traversing pin. | Unlocks left side of traveling lock. Pulls left front traversing pin. | | Obtains M35 firing panel box and firing cable. Lays firing cable to fire control point. | | Assisted by assembly specialist 2, removes rocket positioning jack assembly from rear shoes of rocket. | |
| 5 | Checks cross-level. Checks boresighting. | Performs boresighting procedures. Reads and reports propellant temperature to chief of section. Replaces thermometer in carrying case. | Assisted by No. 2, installs two rear ground anchor chains. | Assists No. 1 to install two rear ground anchor chains. | Assisted by No. 4 installs four front ground anchor chains. | Assists No. 3 to install four front ground anchor chains. | | | | | |
| 6 | Measures site to mask (should be done prior to occupation of position). | | Assisted by No. 2, power elevates to 800 mils (M31 rocket) and then depresses to less than 100 mils. | Power elevates and depresses as directed by No. 1. | | | | | Nonnuclear: Assisted by the assembly specialists checks out the rocket motor and firing circuit. Nuclear: Performs duties in accordance with TM 9-1100-200-12. | Assists the senior assembly specialist. | Assists the senior assembly specialist. |
| 7 | Reports referred deflection, site to mask and propellant temperature to the FDC. Reports to the section commander when prepared for action. | | | | | | | | | | |

Table XVIII. Specific Duties in Firing

| Sequence | Chief of section | Gunner | No. 1 | No. 2 | No. 3 | No. 4 | No. 5 | No. 6 | Senior assembly specialist | Assembly specialist 1 | Assembly specialist 2 |
|---|---|---|---|---|---|---|---|---|---|---|---|
| 1 | Follows fire commands. Supervises section. Announces initial deflection and quadrant elevation. | Lays launcher on initial deflection. | Lays launcher on initial quadrant elevation (directs No. 5 in power elevation and fine adjusts, using handwheel). | Power elevates as directed by No. 1. | Records low-level wind lateral and head or tail components. | | | | Nonnuclear: Completes checkout of rocket motor and firing circuit as directed. Nuclear: Performs duties in accordance with TM 9-1100-200-12. Supervises activities of assembly specialists. | Assists senior assembly specialist as directed. | Assists senior assembly specialist as directed. |
| 2 | Reports mistakes or unusual incidents to section commander. | | Pulls all quick release devices to remove electric blankets. | Assisted by No. 4, removes electric blankets from left side. | Computes and announces corrections for low-level winds to the section commander. | Assists No. 2 to remove electric blankets. | Assisted by No. 6, removes electric blankets from right side. | Assists No. 5 to remove electric blankets. | | | |
| 3 | | | | | | | | | Assisted by the assembly specialists, completes checkout and preparation of the rocket motor for firing. | Assists senior assembly specialist to checkout and prepare rocket motor for firing. | Assists senior assembly specialist to checkout and prepare rocket motor for firing. |
| 4 | Announces and checks final deflection, time, and quadrant elevation. | Lays launcher on final deflection. | Lays launcher on final quadrant elevation (directs No. 5 in power elevation and fine adjusts, using handwheel). | Power elevates as directed by No. 1. | | | | | Fuzes and arms the rocket. | | |
| 5 | | Removes sight unit and places in storage case. | Removes telephone from blast area. | | | | | | | | |
| 6 | Upon receipt of reports from gunner, No. 5, and the assembly specialist, reports to section commander ready to fire. | Reports launcher laid and ready to fire. | | Reports launcher safe to fire. | | | | | Reports rocket ready to fire. | Conducts final continuity of firing circuit. | |
| 7 | Supervises firing sequence. Reports to FDC: deflection, QE, and time fired. | | | | | | | | | Fires rocket on order | |

Table XIX. Specific Duties in March Order

| Sequence | Chief of section | Gunner | No. 1 | No. 2 | No. 3 | No. 4 | No. 5 | No. 6 | Senior assembly specialist | Assembly specialist 1 | Assembly specialist 2 |
|---|---|---|---|---|---|---|---|---|---|---|---|
| 1 | Supervises work of section. Inspects equipment for loss or damage. | Traverses launching beam to center. | Power depresses beam to zero. | Moves prime mover to launcher position. | Removes and stores rear ground anchor chains. | Removes and stores front ground anchor chains. | Assists Nos. 3 and 4. | Moves section vehicle to fire control point. March orders fire control point. | Assisted by the assembly specialists, prepares tools and equipment for traveling. | Assists as directed. | Assists as directed. |
| 2 | | Directs loading of equipment. | Assisted by No. 2, locks rear traversing locks. | Assists No. 1 to lock rear traversing locks. | Emplaces right front traversing pin. Locks right side of traveling lock. | Emplaces left front traversing pin. Locks left side of traveling lock. | | | Supervises installing of straps and traveling clamp assemblies. | Installs rear, center, and front strap assemblies. Installs left rear, left center and left front traveling clamps (as directed). | Installs rear, center, and front strap assemblies. Installs right rear, right center and right front traveling clamps. |
| 3 | | | Directs Nos. 2,3,4, and 5 in replacing launcher wheels. | Obtains jack handle. Operates left rear leveling jack. Replaces caster wheel. Lowers launcher. Replaces jack handle. | Obtains jack handle. Operates right rear leveling jack. Assists No. 2. Replaces jack handle. | Obtains jack handle. Operates left front leveling jack. Replaces left front wheel. Lowers launcher. Replaces jack handle. | Obtains jack handle. Operates right front leveling jack. Replaces right front wheel. Lowers launcher. Replaces jack handle. | | | | |
| 4 | | Assisted by Nos 2, 3, and 4, connects the launcher to the prime mover. Reports when ready. | Assisted by Nos 5 and 6, prepares section vehicle for transport. Reports when ready. | Assists gunner to connect launcher to prime mover. | Assists gunner to connect launcher to prime mover. | Assists gunner to connect launcher to prime mover. | Assists No. 1 to prepare section vehicle. | Assists No. 1 to prepare section vehicle. | Checks tools and equipment when loaded. Reports when ready. | | |
| 5 | Reports to section commander when ready to displace. | | | | | | | | | | |

# INDEX


| | Paragraphs | Page |
|---|---|---|
| Accuracy tests for telescope mount | 49-52 | 29 |
| Action, to prepare | 20,21 | 17,17 |
| Adjustment of sighting and fire control equipment | 39-42 | 27 |
| Qualification tests | 111-115 | 59 |
| Verification by chief of section | 24 | 19 |
| After operation service | 59 | 35 |
| Agents, procedures for decontaminating: | | |
| Biological | 62 | 38 |
| Chemical | 61 | 37 |
| Radiological | 63 | 38 |
| Aiming point: | | |
| To identify to gunner | 24 | 19 |
| To set a common deflection | 24 | 19 |
| Aiming point, distant | 29 | 23 |
| Ammunition: | | |
| Care | 33,36 | 24,25 |
| Decontamination | 60-63 | 37 |
| Destruction | 64-66 | 39 |
| Safety precautions | 67-71 | 41 |
| Angles, emplacement | 20 | 17 |
| Assembly, disassembly of launcher | 55 | 35 |
| Assembly specialist, senior (see Duties). | | |
| Assigning of duties with reduced personnel | 24 | 19 |
| Basic data, to record | 24 | 19 |
| Basic periodic tests | 43-53 | 28 |
| Accuracy tests for telescope mount | 49,50 | |
| Panoramic telescope | 51 | |
| Serviceability of launcher beam | 53 | 30 |
| Test gunner's quadrant | 44-48 | 28 |
| Beam, launcher, test for serviceability | 53 | 30 |
| Before operation service | 59 | 35 |
| Biological agents, procedures in decontamination | 63 | 38 |
| Blanket, electric: | | |
| Use | 34 | 24 |
| Installation | 35 | 25 |
| Boresighting: | | |
| Daylight | 41 | 27 |
| Equipment | 39 | 27 |
| General | 40 | 27 |
| Night, or inclement weather | 42 | 28 |
| Boresight bracket | 41 | 27 |
| Call off | 11 | 11 |
| Camouflage | 37 | 25 |
| Cease firing | 30 | 23 |
| Change: | | |
| In data during firing | 31 | 23 |
| Posts | 13 | 11 |
| To deflection | 25 | 20 |
| Characteristics of equipment | 4 | 5 |
| Chemical agents, decontamination procedures | 61 | 37 |
| Chief of section, (see Duties). | | |
| Classification, individual, gunner's qualification tests | 84 | 45 |
| Commands and formations, preliminary | 10-16 | 9 |
| Common aiming point, to set a deflection on | 25 | 20 |
| Comparison test, gunner's quadrant | 47 | 29 |
| Composition, firing section | 6 | 7 |
| Conditioning, rocket and motor | 34 | 24 |
| Conduct of training | 74 | 43 |
| Correction(s): | | |
| Gunner's quadrant | 48 | 29 |
| Mistakes | 24 | 19 |

| | Paragraphs | Page |
|---|---|---|
| Decontamination: | | |
| Biological and radiological agents | 63 | 38 |
| Chemical agents | 61 | 37 |
| Definition and terms | 3 | 5 |
| Deflection: | | |
| Common, to set | 25 | 20 |
| To apply correction | 25 | 20 |
| To set or change | 25 | 20 |
| Qualification tests | 86 | 46 |
| Destruction of equipment | 64-66 | 39 |
| Direction: | | |
| Of fire, to mark | 20 | 17 |
| Disassembly, adjustment, and assembly | 55 | 35 |
| Dismount | 15 | 11 |
| Distant aiming point | 29 | 23 |
| Drill: | | |
| Safety precautions | 67-71 | 41 |
| Section: | | |
| Instructions | 9 | 9 |
| Dropping of rocket | 36 | 25 |
| Duties of individuals: | | |
| Assembly with cart | Table XII and XIV | 91 95 |
| Assembly with M405 | Table XI | 89 |
| Assembly with skid | Table XIII and XV | 93 97 |
| Firing | Table VI and XVIII | 81 103 |
| Loading with M405 | Table II | 71 |
| Loading with tripod | Table XVI | 99 |
| Loading with wrecker | Table I | 69 |
| March order | Table VI, VII, and XIX | 81 85 105 |
| Prepare for action | Table III, IV, and XVII | 73 77 101 |
| Duties of personnel, general | 7 | 7 |
| Electrical checks of rocket motor | 7 | 7 |
| Emplacement limitations | 20 | 17 |
| End-for-end test | 45 | 28 |
| Fall in | 10 | 9 |
| Fall out | 16 | 11 |

| | Paragraphs | Page |
|---|---|---|
| Fire: | | |
| The rocket | Table VI, XVIII | 81 103 |
| To indicate launcher ready | Table VI, XVIII | 81 103 |
| Firing: | | |
| Cease | 30 | 23 |
| Duties | Table VI, XVIII | 81 103 |
| Firing and drill, safety -precautions | 67-71 | 41 |
| Formations and commands, preliminary | 10-16 | 9 |
| Form the section | 10 | 9 |
| Gunner's quadrant: | | |
| Correction | 48 | 29 |
| Qualification tests | 111-115 | 50 |
| Test of | 44 | 28 |
| To lay for quadrant | 26 | 21 |
| Handling unit | 19 | 15 |
| Identify aiming point to gunner | 24 | 19 |
| Incidents, unusual, to report | 24 | 19 |
| Lateral alinement, sight unit | 40 | 27 |
| Launcher: | | |
| Beam serviceability | 53 | 30 |
| Characteristics | 4 | 5 |
| Preparation for action | Table III, IV, and XVII | 73 77, 101 |
| Preparation for traveling | Table VI, VII, and XIX | 81 85, 105 |
| To fire | Table VI, XVIII | 81 103 |
| To lay for direction | 25 | 20 |
| To lay for quadrant | 26 | 21 |
| To load | 19 | 15 |
| To refer | 26 | 21 |
| To unload | 32 | 23 |

| | Paragraphs | Page |
|---|---|---|
| Lay: | | |
| For direction | 25 | 20 |
| For quadrant | 26 | 21 |
| Level the launcher | 40 | 27 |
| Loading the launcher | 19 | 15 |
| Maintenance. (See Operational Services). | | |
| March order | 23 | 19 |
| Mask, to measure site | 24 | 19 |
| Qualification test | 96-100 | 48 |
| Maximum emplacement angles | 20 | 17 |
| Micrometer test gunner's quadrant | 46 | 28 |
| Minimum training schedule | 77 | 44 |
| Misfires, safety precautions | 70 | 42 |
| Mistakes, to report | 24 | 19 |
| Motor conditioning | 34 | 24 |
| Mount to | 14 | 11 |
| Nuclear warheads | 7 | 7 |
| Occupy position | 20 | 17 |
| Operational services: | | |
| Operational services: | | |
| After operation | 59 | 35 |
| Before operation | 59 | 35 |
| During operation | 59 | 35 |
| Parallax | 51 | 30 |
| Periods, individual training | 76 | 43 |
| Plumbline | 39 | 27 |
| Posts, section | 12, 13 | 11,11 |
| Precision: | | |
| In laying | 28 | 23 |
| Standards, qualification tests | 79 | 45 |
| Preliminary commands and formations | 10-16 | 9 |
| Propellant temperature, reading and reporting | 25 | 20 |
| Propellant temperature limits | 33 | 24 |
| Radiological agents, decontamination | 63 | 38 |
| Record basic data | 24 | 19 |
| Records | 56 | 35 |
| Reduced personnel, assign duties | 24 | 19 |
| Refer the launcher, to | 25 | 20 |
| Responsibilities in inspections | 58 | 35 |
| Safety data | 68 | 41 |
| Safety officer | 71 | 42 |
| Safety precautions: | | |
| Drill and firing | 71 | 42 |
| General | 67 | 41 |
| Misfires | 70 | 42 |
| Safety data | 68 | 41 |
| Safety features | 69 | 41 |
| Schedule, minimum training | 77 | 44 |
| Scores, qualification tests | 84 | 45 |
| Scoring, qualification tests | 82 | 45 |
| Tests: | | |
| Basic periodic | 43-53 | 28 |
| Qualification of gunners | 78 | 45 |
| Gunner's quadrant | 44 | 28 |
| Sight unit | 49, 51 | 29,30 |
| Telescope mount | 50 | 29 |
| Thermometer, powder | 25 | 20 |
| Training: | | |
| Conduct | 74 | 43 |
| Minimum schedule | 77 | 44 |
| Objectives | 73 | 43 |
| Purpose and scope | 72 | 43 |
| Verification of adjustments of fire control and sighting equipment | 24 | 19 |
| Warhead preparation | 7 | 7 |
| Wind-measuring set | 21, Table IV, VII | 17, 77,85 |

3000015689

By Order of the Secretary of the Army:

EARLE G. WHEELER,
*General, United States Army,*
*Chief of Staff.*

Official:

J. C. LAMBERT,
*Major General, United States Army,*
*The Adjutant General.*

Distribution:

Active Army:

DCSPER (2)
ACSI (2)
DCSLOG (2)
DCSOPS (2)
CORC (2)
CRD (1)
COA (1)
CINFO (1)
TIG (1)
CNGB (2)
USCONARC (5)
USAMC (5)
USACDC (2)
Armies (5)
Corps (3)
Div (2)
Div Arty (5)
Bde (5)
FA GP/BG (5)
CC (5)
Ft Bragg (2)
Ft Hood (2)
Ft Lewis (2)
TJAGSA (1)
PMGS (1)
MFSS (1)
USAAMS (50)
USACHS (1)
USA Ord Sch (1)
USAES (1)
USAQMS (1)
USARSCH (1)
USASCS (1)
USACMLCSCH (1)
Centers (5)
Units org under fol TOE:
6-175 (5)
6-176 (5)
6-177 (5)
6-525 (5)
6-526 (5)
6-527 (5)

NG: Units org under fol TOE: 6-100 (2); 6-175 (2); 6-177 (1); 6-300 (2), 6-401 (2); 6-501 (2).
USAR: Units - same as active Army.
For explanation of abbreviations used, see AR 320-50.



☆ U. S. GOVERNMENT PRINTING OFFICE· 1963 O—700-612—6011A

PENTAGON LIBRARY
3000015689